REDICOR™

Modular Steel Form System

BY VULCRAFT

Design Manual

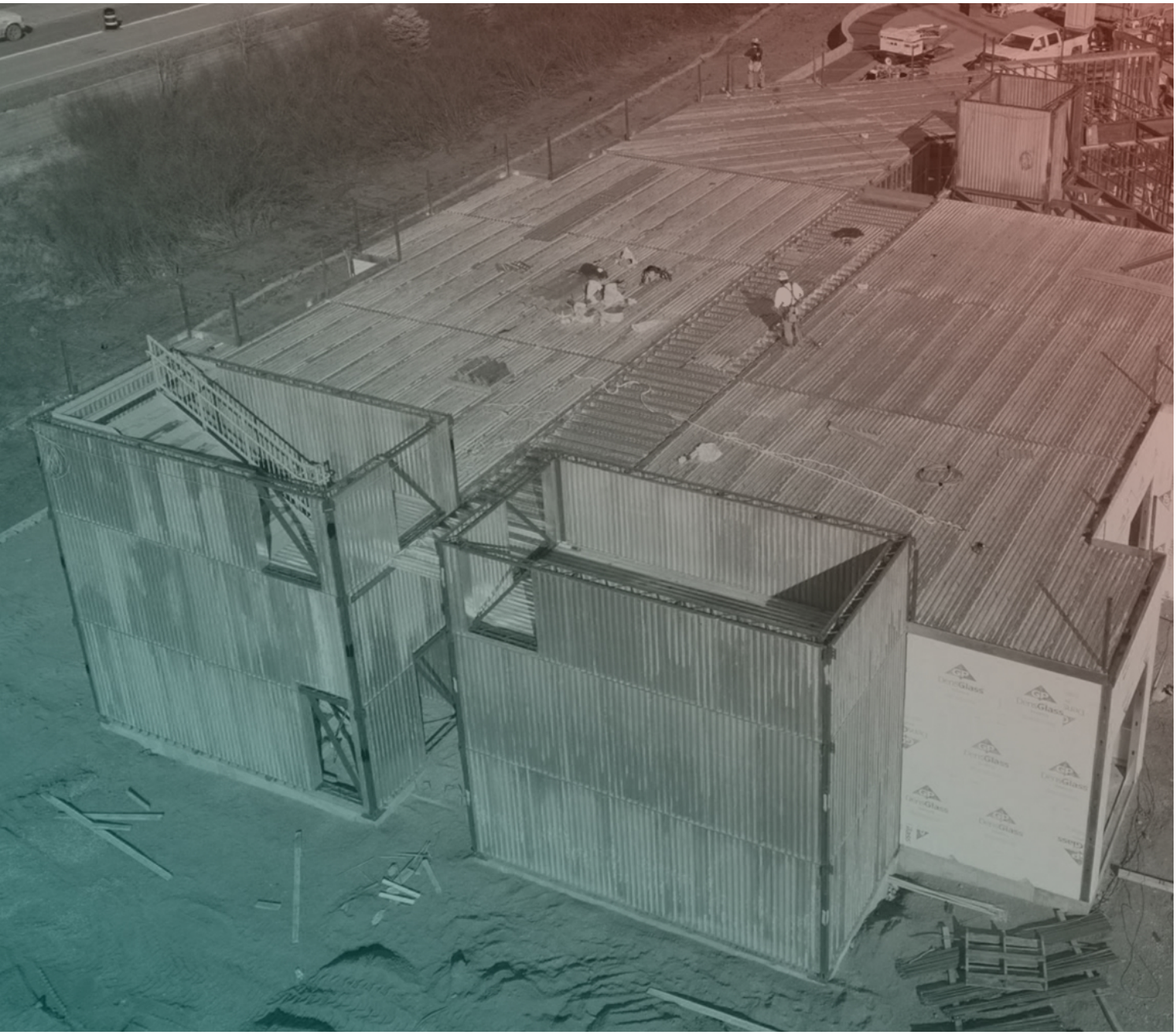

v2021RC

NUCOR®

VULCRAFT/VERCO

Powerful Partnerships
Powerful Results

TABLE OF CONTENTS

Vulcraft reserves the right to change the design or details of its products without notice. The information in this manual is presented for general information only and is not to be used or relied upon for any application without complete review of the proposed application and without a complete review by a licensed professional architect, engineer, designer or other qualified professional.

Vulcraft assumes no liability whatsoever for the accuracy or completeness of the information contained herein.

Vulcraft makes no representation or warranty of any kind, either express or implied, respecting any information contained in this manual including, but not limited to, the accuracy, completeness or suitability of such information for any particular purpose or use.

In addition, Vulcraft expressly disclaims any liability for incidental, special, consequential or punitive damages including, but not limited to, loss of profits or loss of use arising out of this manual or its use.

Vulcraft's liability, warranties and other obligations with respect to its products are set forth in the Terms and Conditions of Sale provided to Buyer in connection with the provision of such products.

As used herein, references to Vulcraft include its parents, affiliates and subsidiaries.

Our Mission

GROW THE CORE
EXPAND BEYOND
LIVE OUR CULTURE

OUR CHALLENGE IS
TO BECOME THE WORLDS SAFEST STEEL COMPANY.

WE LIVE EACH DAY WITH
GRATITUDE
FOR THE FAMILIES, CUSTOMERS AND PARTNERS THAT MAKE OUR WORK POSSIBLE.

REDICOR SALES REPRESENTATIVES

Jim Freiberg
Sales Representative
P: 303.921.7289
E: jim.freiberg@nucor.com

V. William (Bill) Keller, PE, MLSE
Design-Build Supervisor
P: 770.845.4764
E: bill.keller@nucor.com

Jason Thornton
Sales Representative
P: 770.891.1045
E: jason.thornton@nucor.com

Glenn Elrod
Sales Manager
P: 402.644.8520
E: glenn.elrod@nucor.com

DOCUMENT PURPOSE

The intended audience of this document are specifying professionals including Architects and Engineers of Record. To aide in the specification process of the RediCor Form System, this document communicates structural design features of the system and indicates the typical scope of design work associated with the system. For further information on installation or inspection please reference the following documents available at www.RediCor.com: RediCor Installation Guide and RediCor Inspection Guide.

GENERAL SYSTEM DESCRIPTION

The RediCor Form System is a stay-in-place modular steel form system engineered to simplify and accelerate on-site construction of cast-in-place reinforced concrete walls and cores. The form system is designed to support light construction loads, which allows floor and roof framing members to be erected prior to concrete placement. Following a system review by the specifying professional, reinforced concrete cores and walls formed with RediCor can also be an easy-to-construct alternative to other systems such as precast and masonry.

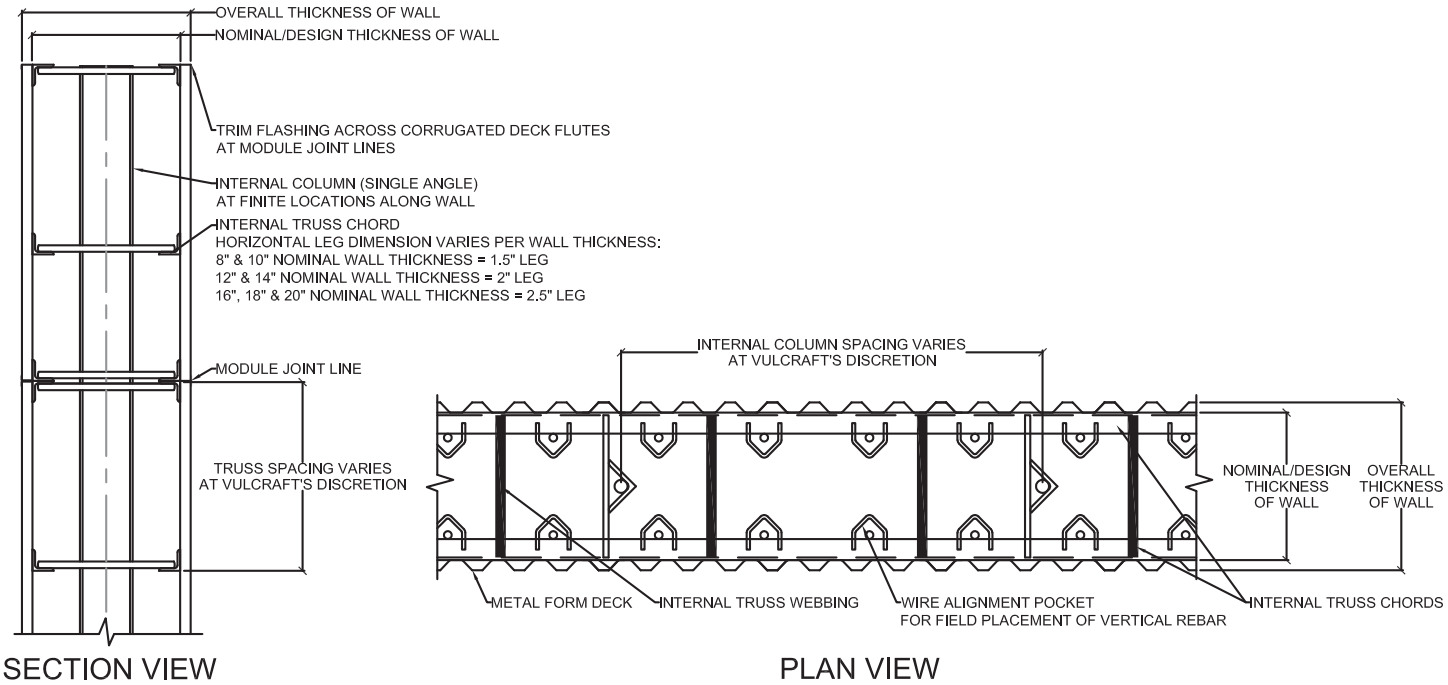

FIGURE 1 - GENERAL FORM SYSTEM DETAILS

FEATURES OF THE FORM SYSTEM

- Factory-built, high-tolerance, steel construction
- Rapid, simplified erection procedure
- Erection of form system can be concurrent with erection of building framing
- Horizontal reinforcement installed at the factory
- Quick field installation of vertical reinforcement facilitated by wire alignment pockets
- Stairs pre-installed at the factory, providing safe early trade access to building floors
- Form system is designed by Vulcraft to support limited construction loads prior to placement of concrete.
- RediCor modules do not require stripping
- Corrugated steel surface can be left exposed or clad with almost any architectural material
- Available for forming cast-in-place reinforced concrete cores and walls ranging in thickness from 8” to 20” in two inch increments
- Potential applications include: stairways, elevators, storage rooms, storm shelters, shear walls, and panic rooms
- 3D Building Information Models (BIMs) are available for coordination during the detailing process


JLG

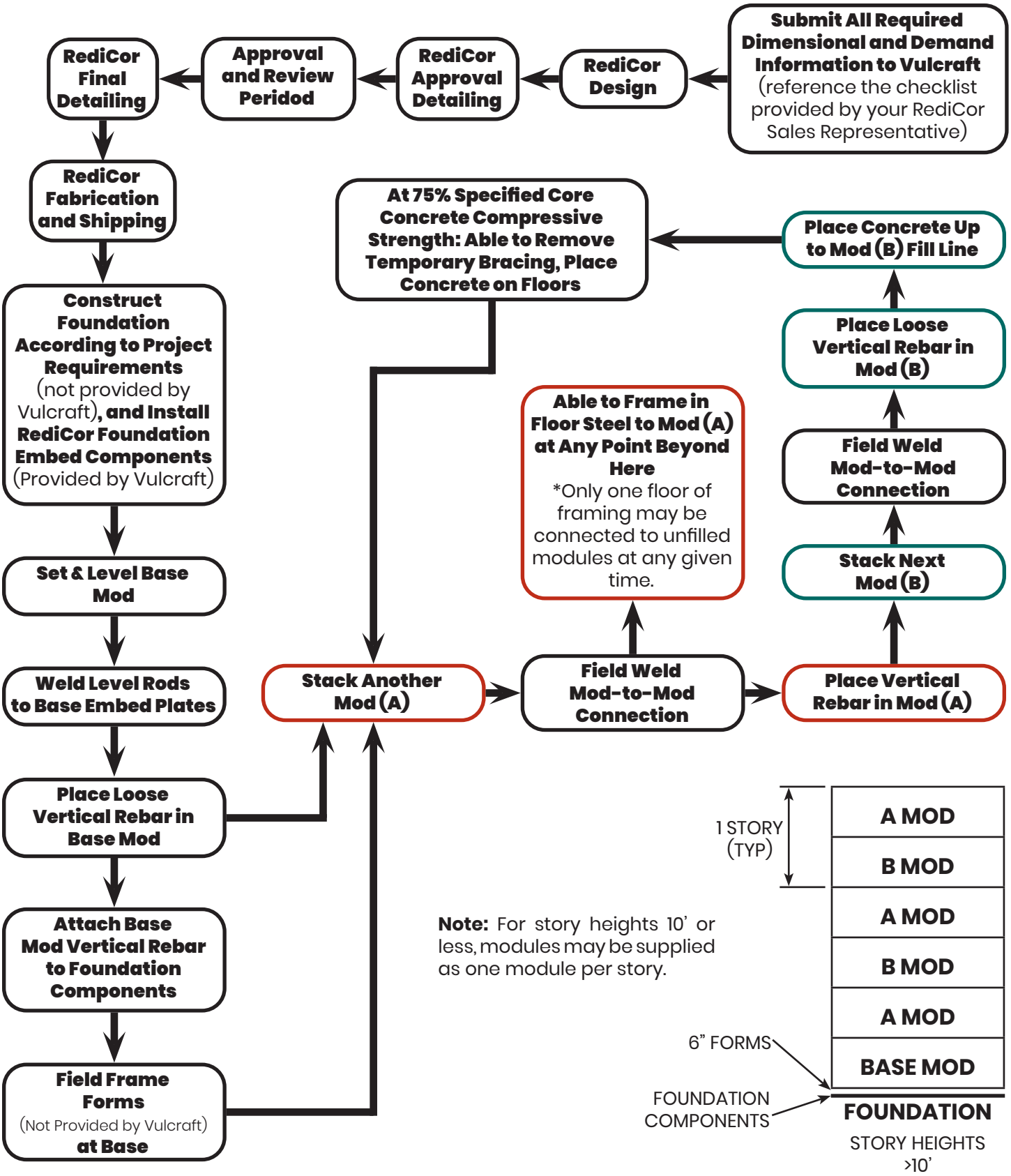
Submit All Required Dimensional and Demand Information to Vulcraft (reference the checklist provided by your RediCor Sales Representative)
RediCor Design
RediCor Approval Detailing
Approval and Review Peridod
RediCor Final Detailing
RediCor Fabrication and Shipping
Construct Foundation According to Project Requirements (not provided by Vulcraft), and Install RediCor Foundation Embed Components (Provided by Vulcraft)
Set & Level Base Mod
Weld Level Rods to Base Embed Plates
Place Loose Vertical Rebar in Base Mod
Attach Base Mod Vertical Rebar to Foundation Components
Field Frame Forms (Not Provided by Vulcraft) at Base
Stack Another Mod (A)
At 75% Specified Core Concrete Compressive Strength: Able to Remove Temporary Bracing, Place Concrete on Floors
Place Vertical Rebar in Mod (A)
Field Weld Mod-to-Mod Connection
Able to Frame in Floor Steel to Mod (A) at Any Point Beyond Here
*Only one floor of framing may be connected to unfilled modules at any given time.
Stack Next Mod (B)
Field Weld Mod-to-Mod Connection
Place Loose Vertical Rebar in Mod (B)
Place Concrete Up to Mod (B) Fill Line
Note: For story heights 10' or less, modules may be supplied as one module per story.
1 STORY (TYP)
A MOD
B MOD
A MOD
B MOD
A MOD
BASE MOD
6" FORMS
FOUNDATION COMPONENTS
FOUNDATION
STORY HEIGHTS >10'

ERECTION TEAM QUICK REFERENCE

Erection Team On-site Installed Items

- Erector-supplied hoisting/rigging materials used to set modules
- Loose vertical rebar, hung in pre-installed wire alignment pockets
- Handrail, guardrails, and wall-mounted handrail brackets(provided by Vulcraft)
- Stair and landing concrete (in the case of pan-type stair systems)
- Module-to-module connecting straps
- Foundation connection including embed plates and/or mechanical couplers (provided by Vulcraft)
- 6" tall forms between base module and foundation (not provided by Vulcraft)
- Erector-supplied bracing (single shear walls only, no bracing required for 4-sided modules)**
- Connections of compound modules**
- Supplemental fire protection for minor field penetrations (not provided by Vulcraft)
- Elevator guide rails and brackets (not provided by Vulcraft)**
- Reference project-specific detail drawings for other miscellaneous items which may require on-site installation

Vulcraft Factory Installed Items

- Lifting lugs for hoisting/rigging
- All horizontal rebar
- All reinforcement for concrete beams between openings and/or hooked rebar
- Landings and stair stringers (to the maximum extent possible)
- All connecting material for members framing into the core. i.e. embed plates with shear tabs for beams, shelf angles for floor deck
- Flat embed plates for attachment of elevator-manufacturer-supplied inserts and/or brackets
- Flat embed plates for attachment of brick relief angles (relief angles supplied by others) *
- Elevator hoist and/or divider beams**

*Single asterisks indicate optional add-on items that should be discussed with a RediCor representative prior to pricing.
**Double asterisks indicate specialty items not present on all projects, reference project-specific quotes and/or detail drawings or contact a RediCor representative to determine if these items will exist on your project.

Reference the RediCor Installation Guide found at www.RediCor.com for further guidance on erection and installation.

SPECIAL NOTES ON FORM SYSTEM INSTALLATION

Delivery and On-Site Storage

When modules are stored on site, each module must be supported above ground surface on wood dunnage. Place dunnage at a minimum of 4 locations either directly beneath outside corner struts or directly beneath column bases.

When storage area is limited on site, just-in-time delivery may be available. Discussion of delivery expectations early in the estimating process can help ensure correct estimates and delivery schedules.

Hoisting

The installer is responsible for providing rigging necessary for hoisting. Rigging must be attached only to the designated lifting lugs on the modules. Lifting cables and/or slings shall always be arranged to meet the requirements shown below. Please reference project-specific detail drawings for potential modifications to required hoist angles and procedures.

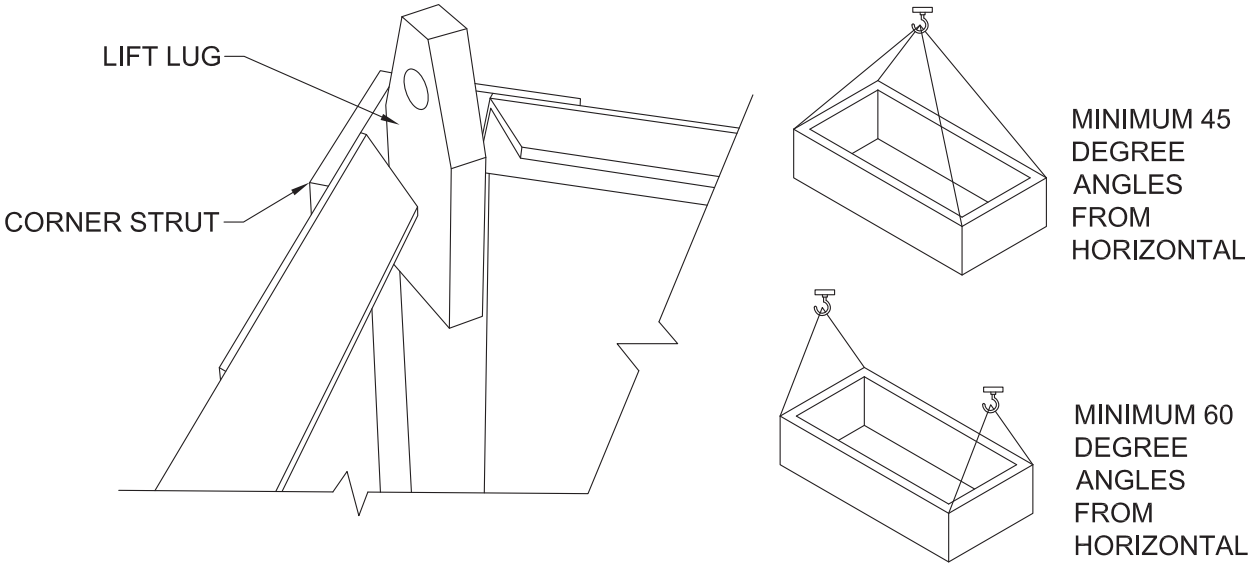

FIGURE 2: TYPICAL LIFT LUG DETAIL

Leveling

The base module is delivered with threaded, loose leveling rods, so that the erector can ensure a plumb and level base for the formwork stack. Leveling is accomplished by turning a nut at each corner of the base module.

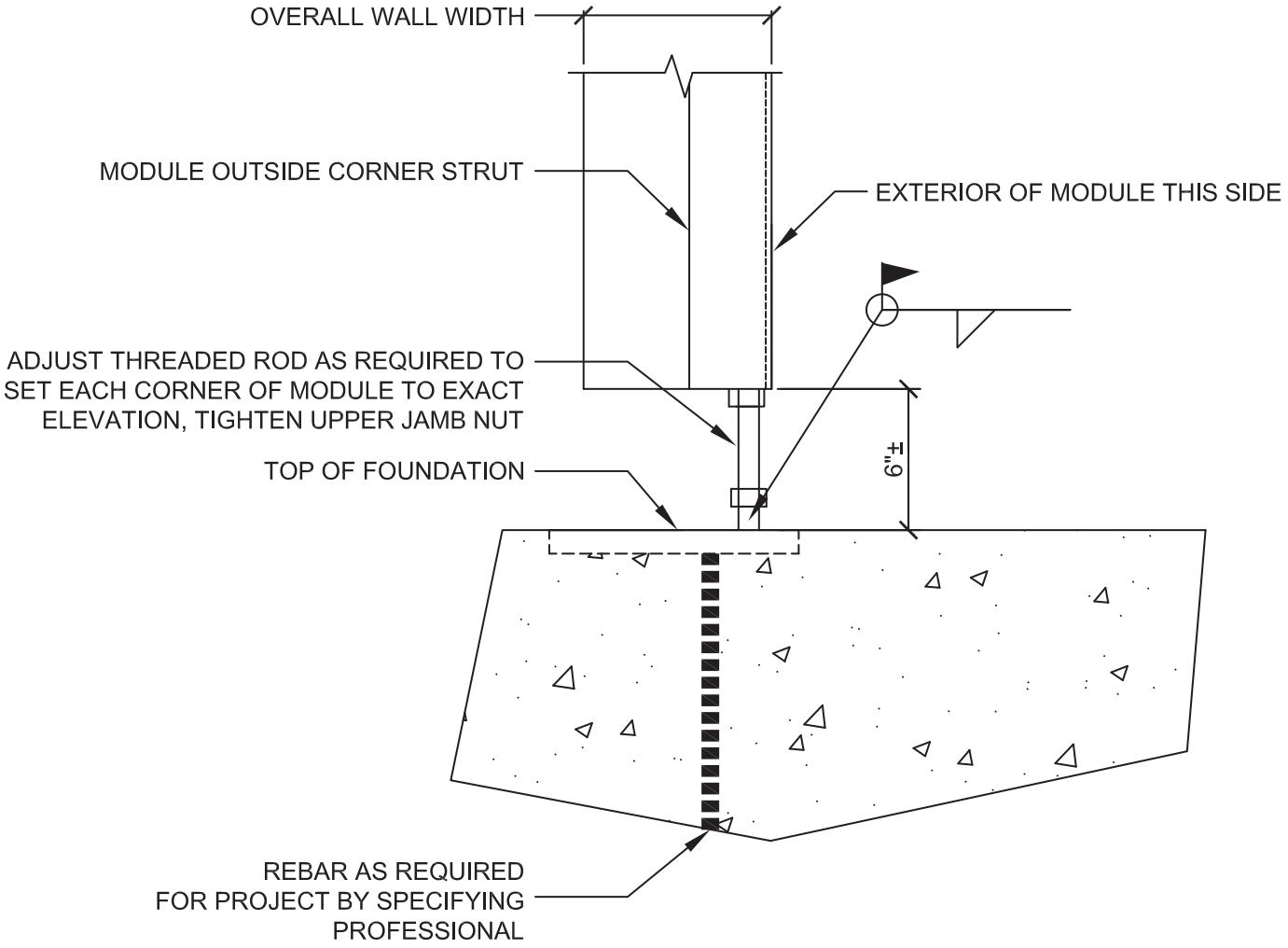

FIGURE 3 - TYPICAL THREADED-ROD FOUNDATION CONNECTOR

Vertical Rebar Installation

Horizontal rebar is factory installed by Vulcraft, while vertical rebar is supplied loose by Vulcraft and installed on site by the erector. Vertical rebar is shipped with pre-installed hooks and is placed into wire alignment pockets at the top of each module. Reference the Reinforcement Detailing section of this manual for more information on vertical reinforcing details.

Forming at Base of Module

Welding access is required at the base of the RediCor Form System for attachment to the foundation; therefore, a 6" gap is present between the top of the foundation and the bottom of the form skin. It is the responsibility of the installer to provide materials for and install an approximately 6" tall form. This is typically constructed of form lumber. Reference the Reinforcement Detailing section of this manual for more information of the typical details for connection of the RediCor-formed walls to the foundation.

FIGURE 4 - FIELD FORMING AT THE BASE OF THE REDICOR FORM SYSTEM

Stacking & Connections Across Joints

Prior to stacking, the installer should ensure that the vertical rebar is installed in the current module. After stacking, a steel strap must be installed at corner struts to connect modules across the joint line prior to any other work occurring on the form system. This strap ensures load transfer between modules for construction and environmental loads.

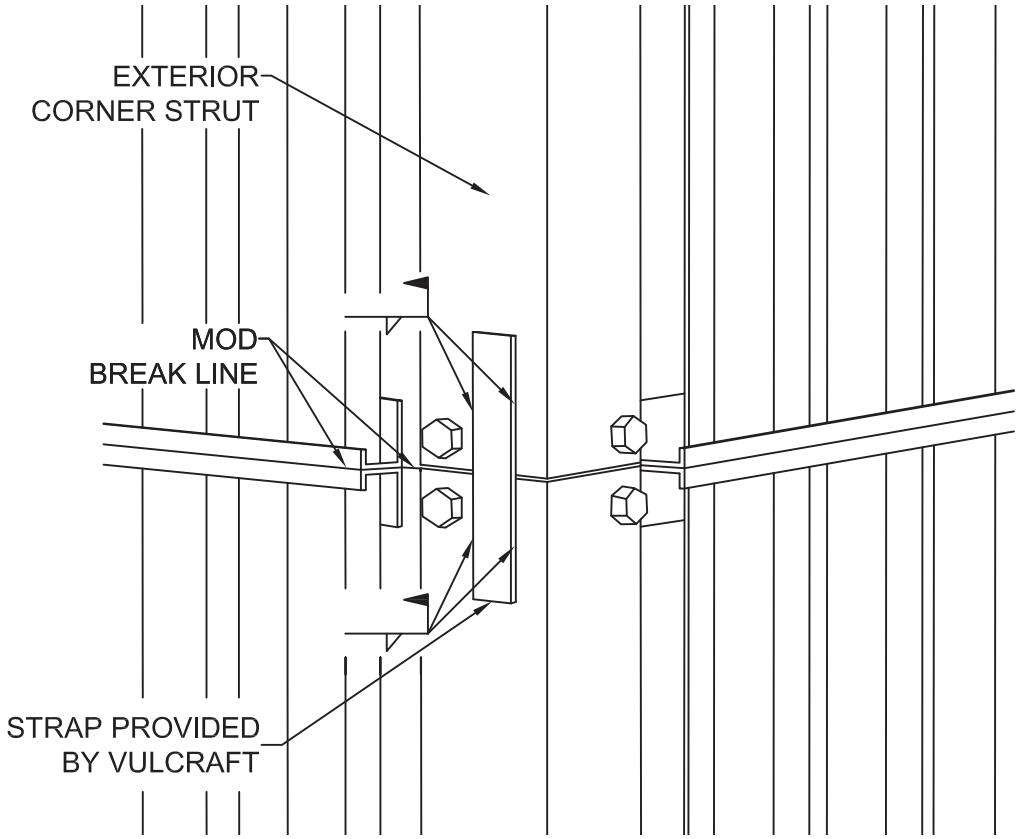

FIGURE 5 - FIELD-INSTALLED STRAP ATTACHMENT ACROSS MODULE JOINTS

Dimensional Tolerances

When installing the RediCor Form System, please be aware of the following fabrication tolerances:

- +/- 3/16" Horizontally
- +/- 1/8" Vertically
- +/- 1/2" Squareness

Penetrations

Small penetrations for mechanical, electrical, or plumbing (MEP) may be blocked-out in field prior to placement of concrete. Vulcraft recommends the detail shown in Figure 6 for reinforcing the form system around such penetrations. Vulcraft does not supply the materials for such reinforcement. Vulcraft does not supply or recommend fire-proofing requirements for such penetrations.

Penetrations may also be cored after concrete placement as with a standard cast-in-place wall. Such penetrations should be coordinated in advance of detailing with Vulcraft and the specifying professional to ensure all reinforcement and form system components will avoid the penetration. By request, Vulcraft can mark the location of the required penetration during fabrication. Any penetrations requiring modification of the plan-specified reinforcing must be approved by the specifying professional.

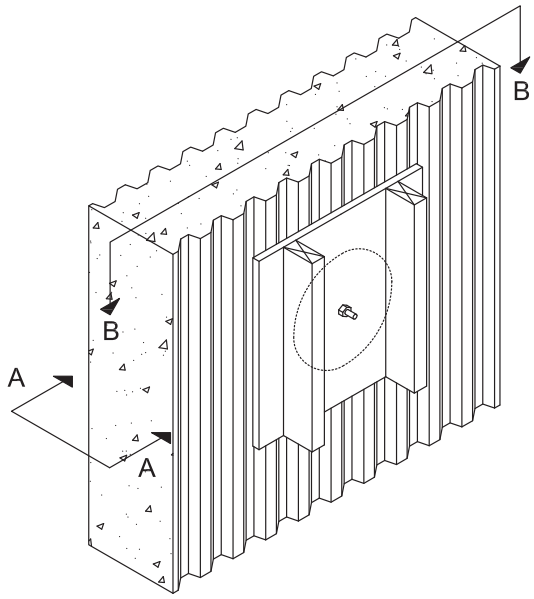

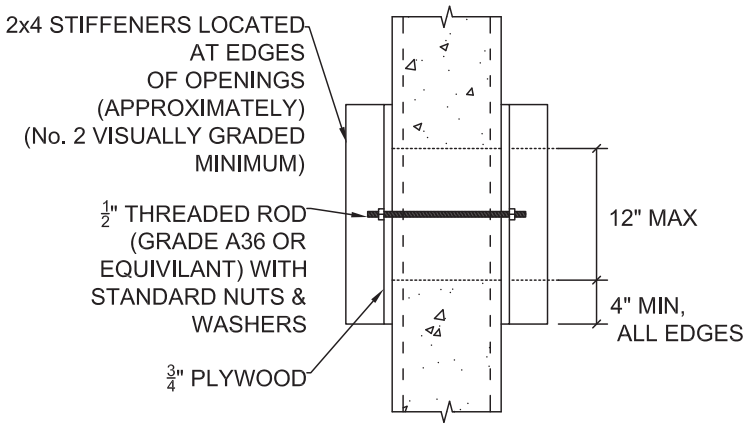

SECTION A-A

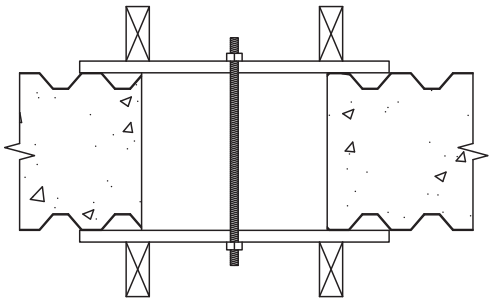

SECTION B-B

FIGURE 6 - RECOMMENDED DETAIL FOR FIELD PENETRATIONS THROUGH REDICOR WALLS

- PENETRATIONS SHOULD BE BLOCKED-OFF WITH 3/4" PLYWOOD EXTENDING A MINIMUM OF 4" PAST EACH EDGE OF OPENING WITH (2) 2x4 STIFFENERS AS SHOWN IN SECTION A-A
- 1/2" DIAMETER THREADED ROD (GRADE A36 OR EQUIVALENT) SHOULD BE USED TO HOLD PLYWOOD IN PLACE
- CONSULT VULCRAFT FOR PENETRATIONS LARGER THAN 12" x 12"

Roof Conditions

RediCor modules are provided with all four walls having the same top-of-form elevation. (See Figure 7) Sloping roof conditions must be formed or framed by others using materials such as bent plate or wood(See Figure 8). With approval from Vulcraft, forming or framing materials may be attached to the RediCor Form System. Typical methods of attachment are self-tapping screws or welding.

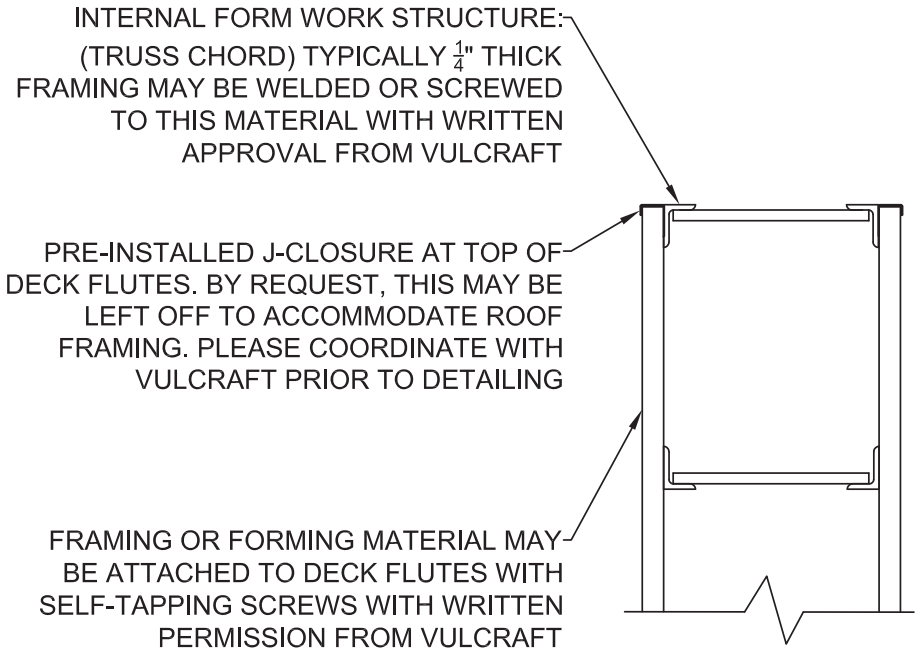

FIGURE 7 – TOP OF REDICOR FORM SYSTEM

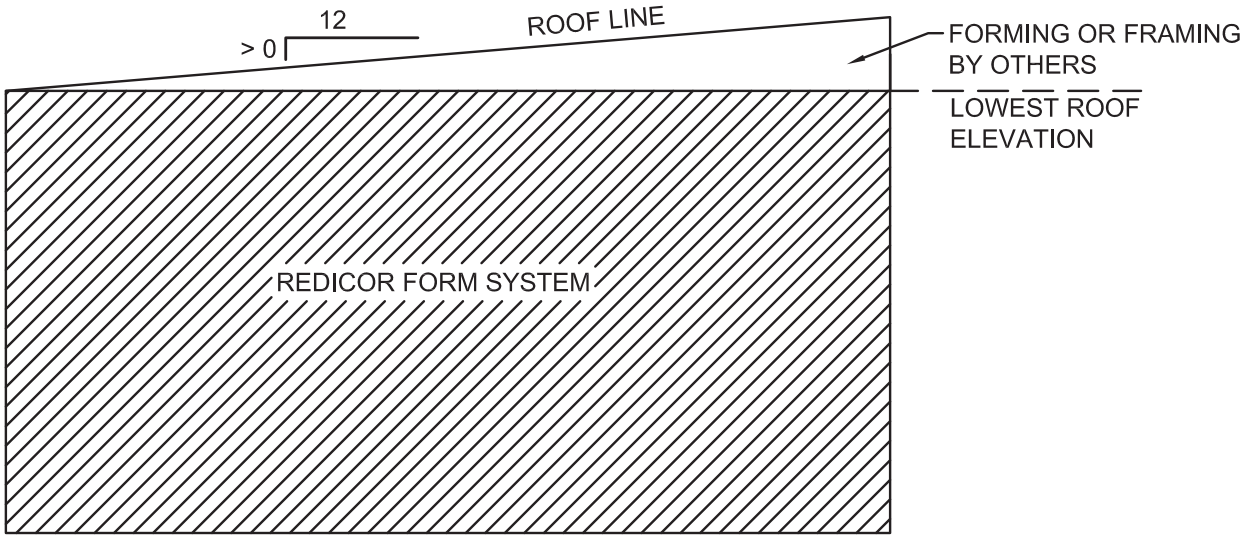

FIGURE 8 – REDICOR FORM SYSTEM FLAT AT ROOF

FORM WALL THICKNESS

The RediCor Form System uses 1" form deck, specifically 1.0C 20ga G60 galvanized deck, on each face of wall. Concrete walls formed using the RediCor Form System must have a plan dimension 2" thicker than the wall thickness required by the structural design of the wall. The form itself and the concrete in the corrugations are not considered as part of the nominal thickness of the wall.

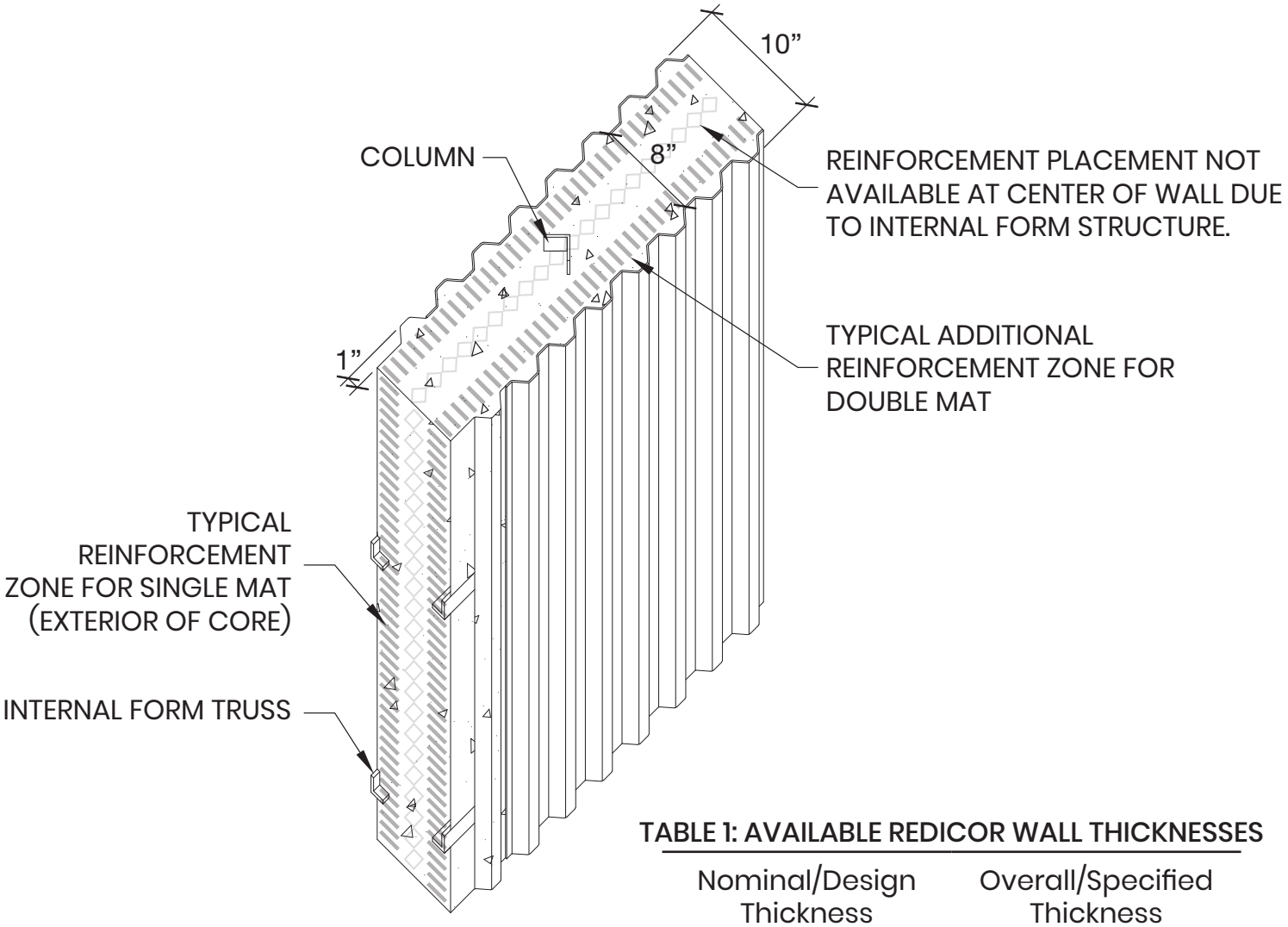

FIGURE 9 - REDICOR WALL, ISOMETRIC VIEW

TABLE 1: AVAILABLE REDICOR WALL THICKNESSES

Nominal/Design Thickness	Overall/Specified Thickness
8"	10"
10"	12"
12"	14"
14"	16"
16"	18"
18"	20"
20"	22"

MODULE CONFIGURATION

RediCor can be supplied as a pre-fabricated box section for a core or as a single wall panel. Wall panels must be braced during construction by erector. Each individual box segment or shear wall panel is referred to as a module.

The maximum size of a single module is controlled by shipping regulations and fabrication capabilities. The standard maximum module size is 10' x 15' x 32' including pre-installed deck support angles and connecting materials such as shear tabs. Note that local shipping regulations may supersede these maximum dimensions. For cores exceeding these plan dimensions, compound modules spliced together on site may be an option. Refer to the next page for standard splice configurations. Please contact a Vulcraft representative for more information.

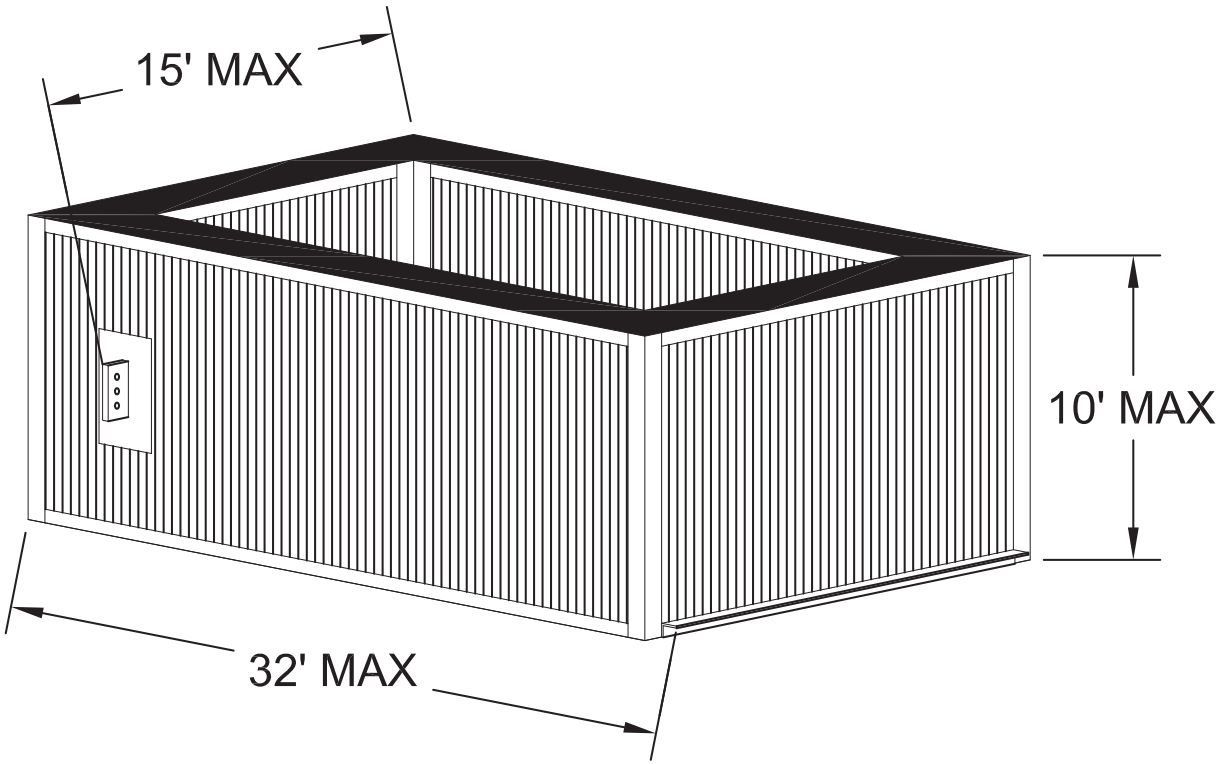

FIGURE 10: STANDARD MAXIMUM MODULE DIMENSIONS

COMPOSITE MODULE CONFIGURATIONS

Composite plan shapes and plan dimensions exceeding single module shipping limitations can be achieved by combining module shapes on site. Contact a Vulcraft representative for availability and recommendations.

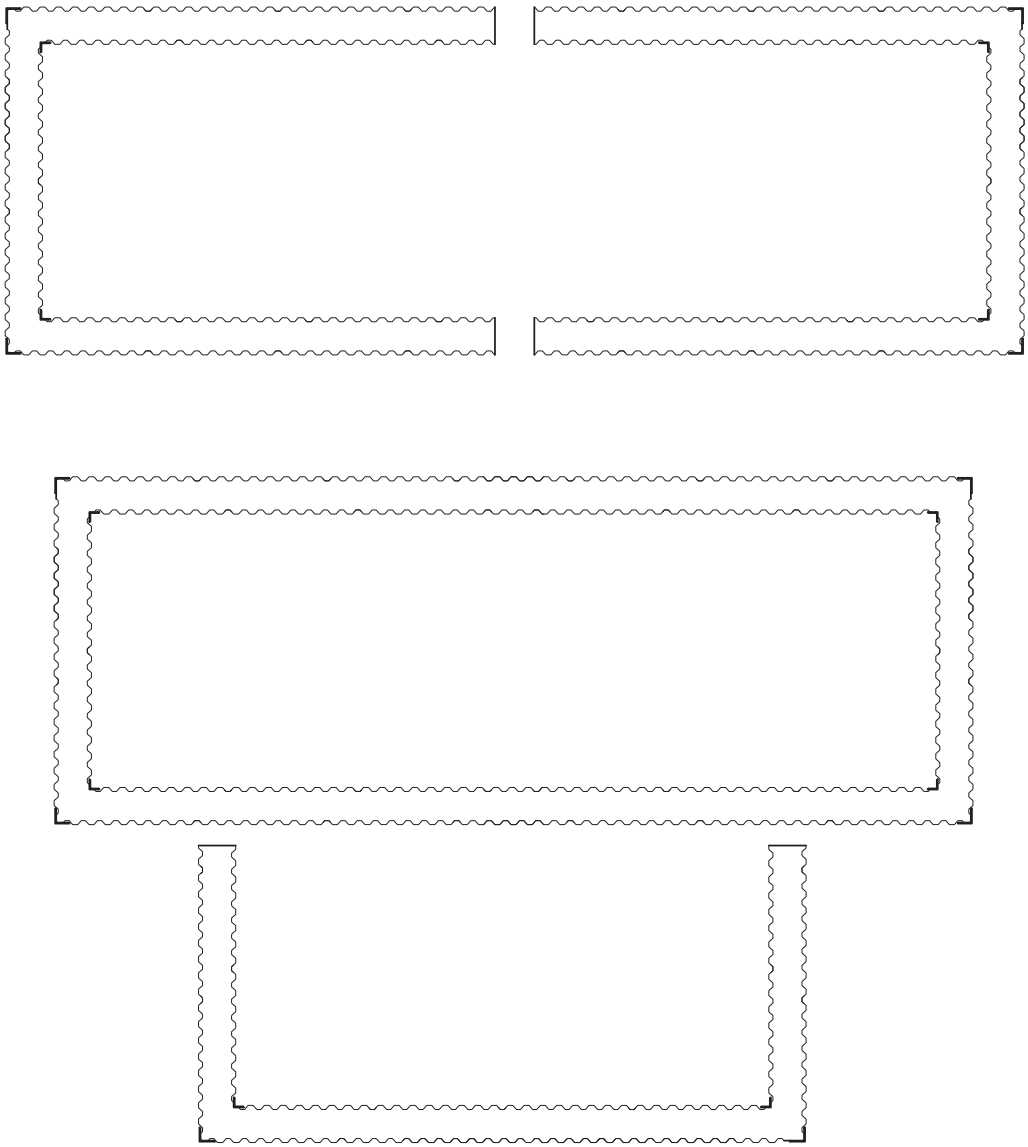

FIGURE 11: POTENTIAL COMPOSITE MODULE SHAPES, CONTACT A VULCRAFT REPRESENTATIVE FOR MORE INFORMATION

Note: Composite shapes require extra attachment work in the field and may require some manual installation of horizontal rebar.

MODULE JOINT ELEVATIONS

Vulcraft determines module joint locations. Joint elevations typically occur several inches below the top of concrete elevation. Whenever possible, RediCor modules will be supplied as one full story height which can provide a significant economical advantage for projects with a maximum of 10' floor-to-floor heights.

When both stair and elevator cores occur in a building, the typical practice is to locate joints for the elevator cores at the same levels as the stair cores.

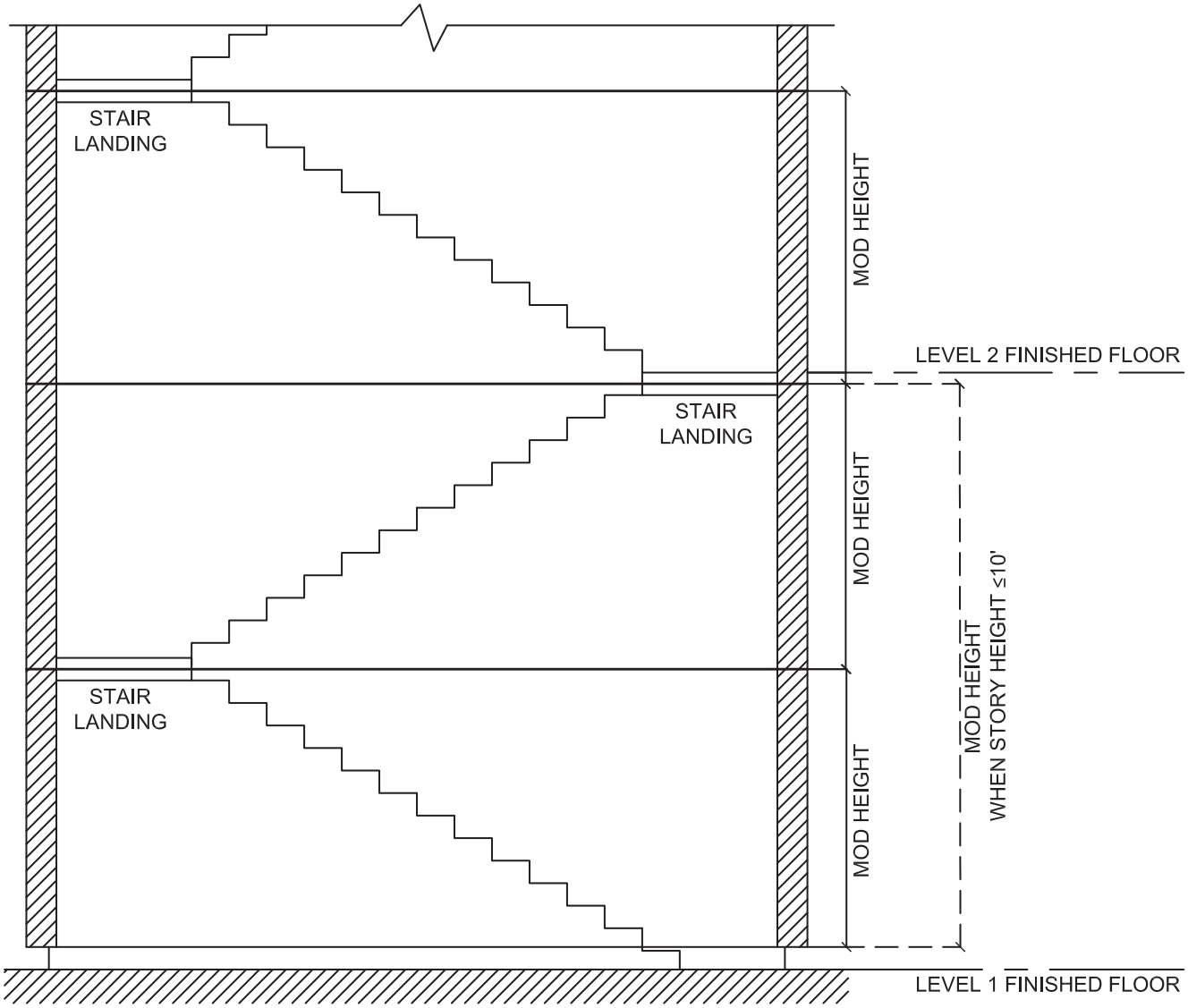

FIGURE 12 – TYPICAL MODULE JOINT ELEVATIONS

ELEVATORS

The RediCor Form System allows for quick construction of reinforced concrete elevator shafts. Special features of the system, such as pre-installed hoist beams, reduce construction time even further. The information in this section addresses items particular to RediCor-formed elevator shafts.

CLEAR HOISTWAY DIMENSIONS

Clear hoistway dimensions will be provided on the RediCor detail drawings. During the design process, it is imperative to consider the additional thickness added to the core due to the form corrugations to avoid encroaching on the required clear hoistway dimensions.

HOIST AND DIVIDER BEAMS

RediCor pre-installs hoist and divider beams, reducing on-site erection time. Pre-installed beams are typically provided with a bolted connection to the core to allow for slight adjustments to field conditions.

FIGURE 13 – PRE-INSTALLED ELEVATOR HOIST BEAMS

ELEVATOR RAIL BRACKETS

Elevator rail brackets typically attach directly to the interior deck surface. As an add-on, Vulcraft may pre-install rail brackets supplied by the elevator manufacturer. The location and shipment of pre-installed brackets ***must*** be coordinated early to prevent delays in fabrication. Alternately, flat embed plates may be provided at rail bracket locations at additional cost. Special attention must be given to whether rail brackets may protrude into the clear hoistway dimensions.

STAIRS

One of the most exciting features of the RediCor Form System is the pre-installation of landings and stairs within stair cores. This saves time and allows easy, early access to the inside of the cores during construction. To the greatest extent possible, stairs and landings will always be pre-installed. In some cases, such as certain composite modules or wraparound stairs, it may not be possible to pre-install the stair stringers. In these cases, the purchaser will be notified early in the process, landings will come pre-installed, and stair stringers will be shipped loose for on-site installation.

CONSTRUCTION USAGE

Pre-installed stair landings and stringers can be used for light construction loads immediately after setting a module and making the module-to-module attachment across the joint line at each corner of the module. Handrails and guardrails are not pre-installed, and any required temporary railings for worker safety are by others. Project-specific detail drawings must be referenced for maximum construction loads allowed on stairs prior to concrete placement, however, these items are typically designed to resist a 20psf live load in addition to their own self-weight.

FIGURE 14 - PRE-INSTALLED STAIRS BEING USED DURING CONSTRUCTION

STANDARD STAIR AND LANDING TYPES

Vulcraft offers two standard stair and landing types: metal pan stairs and metal grating stairs. Structural design of the stairs, landings, and their connection to the core is by Vulcraft. All dimensions, loads, and serviceability requirements needed for the structural design of the stairs and landings must be supplied to Vulcraft by the specifying professional. If other types of stairs are desired or required for your project, please contact a Vulcraft representative.

METAL PAN WITH CONCRETE FILL

Metal pan stairs can be installed at the factory, this includes the stair pans and metal deck for the landings. Once in place, the concrete can be placed in the stair system along with the rest of the concrete on the project.

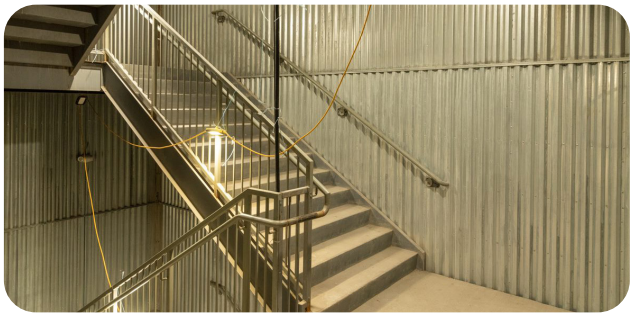

FIGURE 15 - METAL PAN STAIRS

METAL GRATING

Both stair treads and landings can be produced from Nucor Grating. Any of Nucor's grating profiles can be used to fabricate the stair system. Reference www.NucorGrating.com for more information.

FIGURE 16 - METAL GRATING STAIRS

DIAMOND PLATE

Diamond plate stair tread and landings are also available for use with the RediCor Form System.

STRINGER MATERIAL

Unless channel or other shapes are specifically indicated in project contract drawings, Vulcraft quotes and provides single-plate stair stringers.

HANDRAILS AND GUARDS

Vulcraft offers pipe or tube balustrades and handrails. Structural design of the handrail system is provided by Vulcraft.

NOTE: ALL LIFE SAFETY AND DIMENSIONAL REQUIREMENTS OF STAIR DESIGN ARE THE RESPONSIBILITY OF THE ARCHITECT OF RECORD.

In some situations, the RediCor Form System may sit on top of a traditionally-formed core. When stairs within the RediCor Form System connect with stairs in the structure below, it is recommended that both sets of stairs come from the same supplier. At the option of the purchaser, Vulcraft may supply both sets of stairs, or Vulcraft may work with an alternate stair supplier. Coordination with outside stair suppliers must occur as soon as possible in the design process for optimum results.

ACCEPTABLE FINISHES

Virtually any cladding material may be applied to the interior or exterior surface of the form. Certain finishes, such as gypsum board at stair core interiors, may affect the dimensions of material supplied by Vulcraft. These finishes must be specified prior to the beginning of detailing.

FURRING STRIPS

Wood or steel furring strips can be used with the RediCor Form System. Typical attachment methods (masonry screws, shot pins, etc.) can be used. If screwed fasteners are to be used to install materials prior to concrete placement, avoid placing fasteners in the same vicinity as rivets. This prevents screws from impacting the form structure. Though furring strips may be attached prior to concrete placement, the finishes themselves (such as gypsum board) must not be installed until after concrete placement. This will prevent unnecessary loads on the unfilled form system and damages to interior finishes during concrete placement.

MASONRY TIES

Masonry ties can be post-installed to the RediCor-formed wall in the same manner as if it where a typical CIP wall. Because the form system includes a stay-in-place internal steel structure, installing drilled fasteners may be difficult. Therefore, powder-actuated fasteners are recommended. Alternately, Vulcraft can provide pre-installed flat embed plates for welded attachment of assemblies required to support building facades.

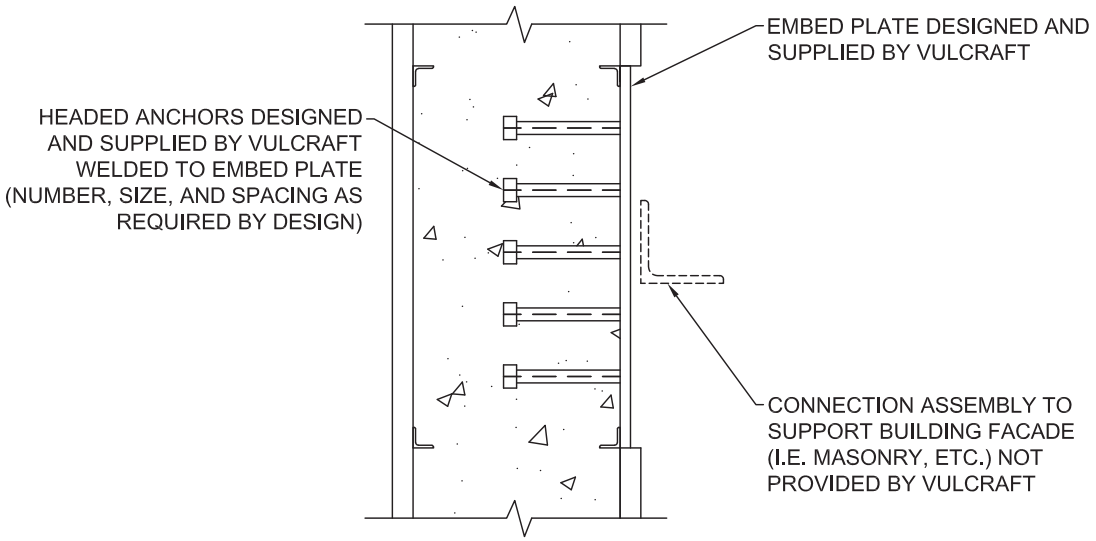

FIGURE 17 - OPTIONAL PRE-INSTALLED EMBED FOR BRICK RELIEF ANGLES

DIRECT ATTACHMENT

Certain finishes can be attached directly to the RediCor Form System. These include gypsum wall board, wood or metal paneling, or any other finish that does not require furring strips on other anchors. After concrete placement, masonry screws may be used. Adhesives can also be used. Ensure any adhesives used are compatible with galvanized metal.

UNFINISHED (GALVANIZED STEEL DECK)

The RediCor Form System can be left bare in both interior and exterior conditions if no finish is required or if the metal deck finish is desired.

INSTALLING DOORS & WINDOWS

Door and window openings will be formed with stay-in-place, light-gauge, galvanized metal that is attached to the form system. Temporary bracing will be installed in the openings and must be removed after concrete placement. Door and window frames can be welded or attached with fasteners to the form system.

FIGURE 18 - TEMPORARY BRACING IN OPENINGS

DESIGN TEAM QUICK REFERENCE

Specifying Professional(s) Design Responsibilities

- Elevations for all walls, dimensioned for geometry and annotated with required loading demands on the walls*
- Nominal/design thickness of walls (overall/ specified thickness is 2" greater than this dimension)
- Definition and detailing for top of foundation walls supporting RediCor-formed walls
- All required geometry for stair and handrail
- Loading and serviceability requirements for the structural design of stair and handrails
- Specification of any finishes that affect RediCor

Vulcraft Design Responsibilities

- Formwork design
- Connection design of members framing into RediCor-formed wall
- Connection design of Redicor-formed wall to foundation
- Detailing of reinforced concrete walls *
- Structural design of stair and handrails

*The internal structure of the RediCor Form System creates some limitations on rebar placement. It is recommended that the specifying professional communicate the design of the reinforcement within RediCor-formed walls as an area of steel per wall segment rather than as specific rebar patterns. Vulcraft will then use these minimum areas of steel in conjunction with code requirements of ACI-318 to detail the reinforcement for each wall segment. Reinforcement detailing will be provided to the specifying professional for review and approval. Reference the Reinforcement Details section of this document for more information on form system limitations and RediCor's standard reinforcing details.

CODES AND REFERENCES

As a basis for design and consistency, this document references IBC 2015, ASCE 7-10, ACI 318-14, and AISC 360-10. Due to varied state and local design requirements, additional coordination is required to confirm that the appropriate building codes are being used for each specific project. These resources must be identified by the specifying professional.

DESIGNING REDICOR-FORMED CONCRETE WALLS

The RediCor Form System is a stay-in-place form for an important element of a building's lateral load resisting system: a reinforced concrete shear core or isolated concrete shear wall. The lateral load resisting system is designed to resist seismic and/or wind forces. These forces, along with gravity loads, building stiffness, drift, torsional stability, deflection compatibility, redundancy factor, lateral irregularities, over strength factors, drag/collector elements, and any other performance requirements, must always be supplied by the specifying professional and would in no case be determined by Vulcraft. All provided forces must be resolved into the appropriate gravity or lateral system and fully tracked to the foundation. Vulcraft does not track load paths through a building.

The RediCor Form System is configured to accept common reinforcement found in Ordinary Reinforced Shear Walls (A.2 or B.5) as defined by ASCE 7 Table 12.2-1 and detailed per ACI 318.

While the RediCor Form System offers many advantages for construction schedule and ease of erection, including being load bearing during construction, it is not at this time considered to add any strength to the final cast-in-place shear wall. For this reason, it is necessary to design the RediCor-formed shear wall with the same considerations as any other cast-in-place shear wall.

FIGURE 19 - REDICOR FORMS READY TO BE UNLOADED ON-SITE

HOW TO SPECIFY DEMANDS AND REINFORCEMENT RATIOS ON A REDICOR-FORMED WALL

The specifying professional must provide demands and reinforcement ratios on all walls. Vulcraft will then detail the steel according to ACI 318 for Ordinary Reinforced Shear Walls to avoid conflicts with the form system. Lateral loads must be specified as ASD or LRFD. Additional direction must be provided for amplified drag loads as required.

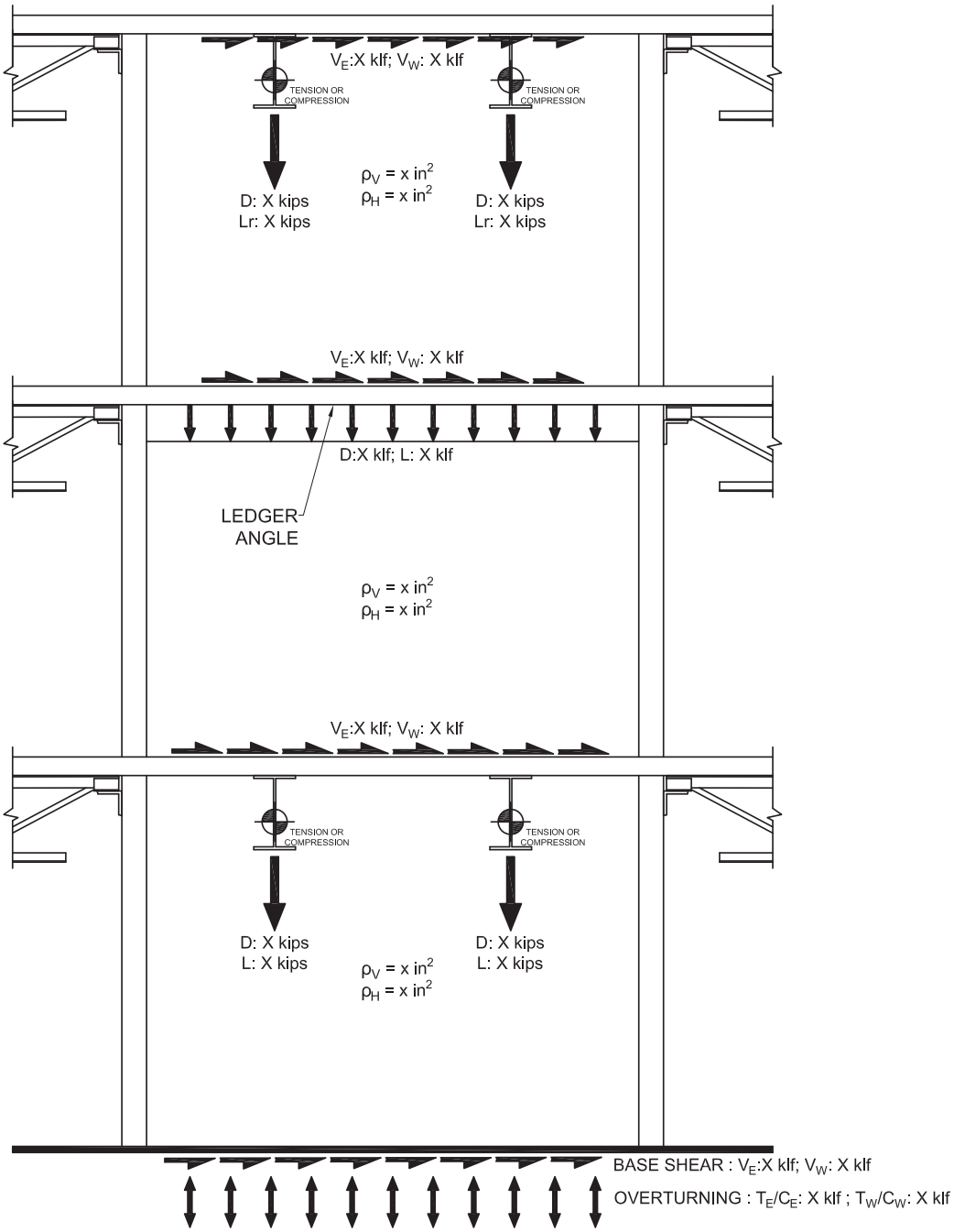

FIGURE 20: SPECIFYING DEMANDS ON A WALL

CONCRETE COMPRESSIVE STRENGTH

The specifying professional is responsible for specifying the required concrete compressive strength for reinforced concrete shear cores or walls formed with RediCor.

MIX DESIGN RECOMMENDATIONS

RediCor is compatible with both normal weight and lightweight concrete. When 3/4" cover is specified, an aggregate smaller than 3/4" is suggested to ensure proper consolidation of the concrete. All other mix properties are to be reviewed by the specifying professional.

PLACEMENT

The RediCor Form System is designed to resist a maximum lateral form pressure of 600psf. The concrete contractor should place concrete in accordance with ACI 347 formulas and guidance so as not to exceed 600psf form pressure. in most applications, a maximum placement rate of 4ft/hr is sufficient to meet these requirements.
Vulcraft does not calculate concrete placement rates.

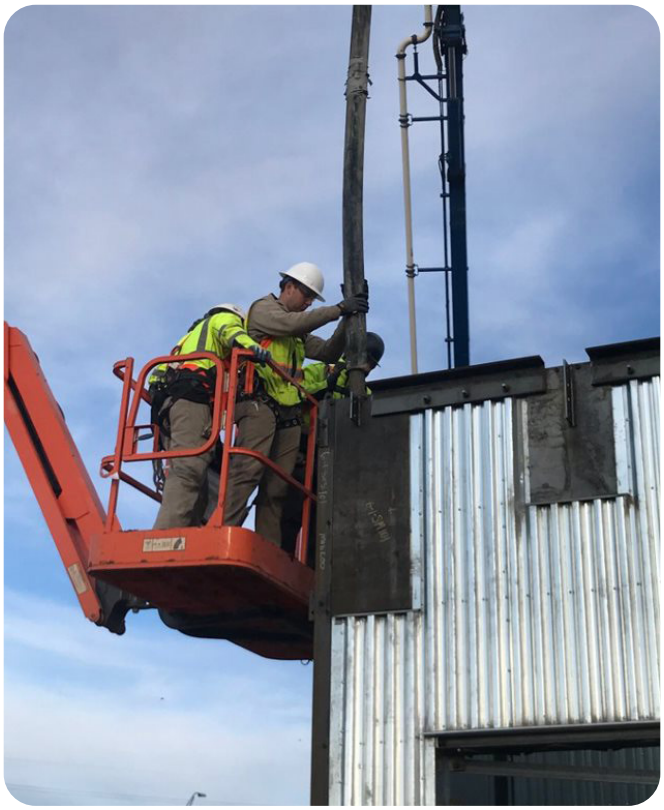

FIGURE 21: CONCRETE BEING PLACED

REINFORCEMENT DETAILING

Due to the RediCor Form System's unique load-bearing capacity prior to concrete placement and its modular construction method, the internal structure of the form system creates some limitations on rebar placement. To avoid interference with internal trusses and columns, guidelines and details in this section must be followed as described.

LAP SPLICES

The RediCor Form System utilizes non-contact lap splices for vertical rebar at module joint locations. Vertical rebar is installed on site into factory placed wire alignment pockets. These pockets are pre-installed at the top of each module and locate each piece of vertical rebar to meet the intent of the wall design. They also confine the bottom of each piece of rebar to maintain the appropriate transverse center-to-center spacing for the non-contact lap splice.

FIGURE 22 – REDICOR WIRE ALIGNMENT POCKETS FOR FIELD PLACEMENT OF LOOSE VERTICAL REBAR

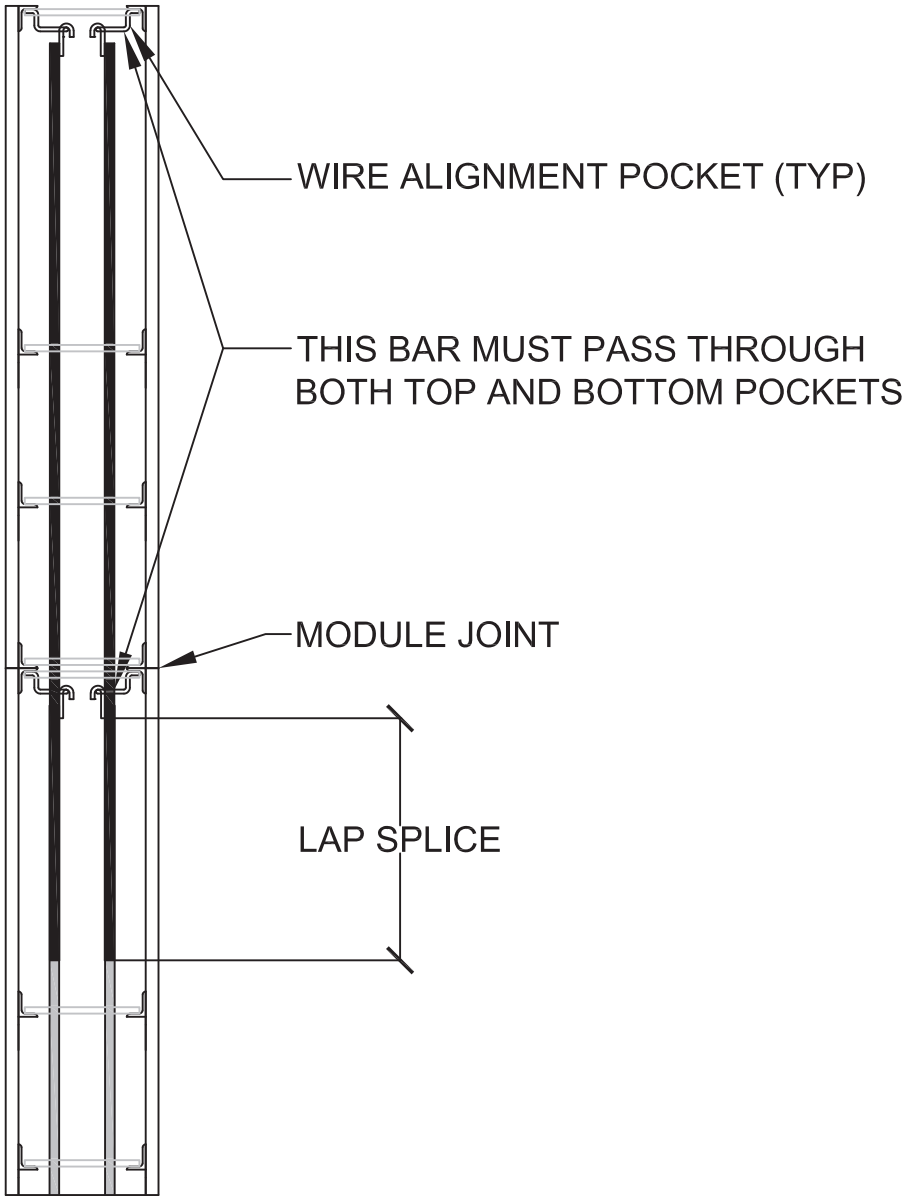

FIGURE 23 – CUT VIEW OF NON-CONTACT LAP SPLICES ACROSS MODULE JOINTS

STANDARD REBAR DEVELOPMENT/LAP LENGTH CALCULATIONS

Vulcraft designs all rebar development and lap lengths using current ACI 318 requirements. These lengths are calculated assuming the bar is in tension. All RediCor-provided non-contact lap slices are considered to be class B.

Unless noted otherwise, grade 60 deformed bar is typically provided for the RediCor Form System.

To avoid material waste, vertical rebar development and lap lengths are calculated separately from horizontal rebar lap splice lengths. Due to the casting position of the horizontal rebar, the lengths of the horizontal laps splices are greater than those for the vertical lap splices.

FIGURE 24 - LOOSE VERTICAL REBAR BEING INSTALLED ON-SITE

Development length equations:

No. 3-6 bars

$$l_d = \left(\frac{f_y \psi_t \psi_e}{25\lambda\sqrt{f_c'}}\right) d_b \quad \text{(ACI 318, Chapter 25.4.2.2)}$$

No. 7-18 bars

$$l_d = \left(\frac{f_y \psi_t \psi_e}{20\lambda\sqrt{f_c'}}\right) d_b \quad \text{(ACI 318, Chapter 25.4.2.2)}$$

Lap length equation:

$l_{st} = 1.3 l_d$ (ACI 318, Chapter 25.5.2.1)

*Vulcraft designs all lap splices as Class B non-contact splices as defined by ACI 318, Chapter 25.5.2.1

Standard hook development:

90-dearee hook

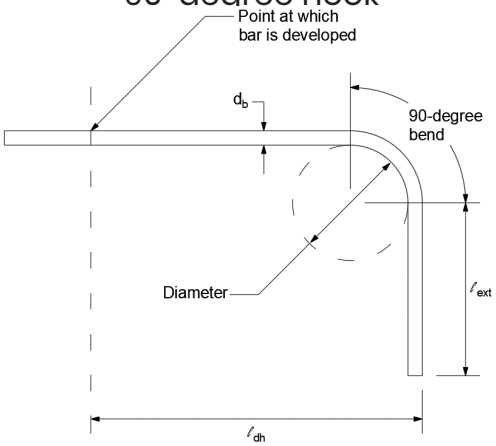

$l_{dh} = l_d$

$l_{ext} = 12 d_b$

Minimum bend diameters (ACI 318, Chapter 25.3.1)

$6 d_b$ (No. 3 through No. 8)

$8 d_b$ (No. 9 through No. 11)

180-dearee hook

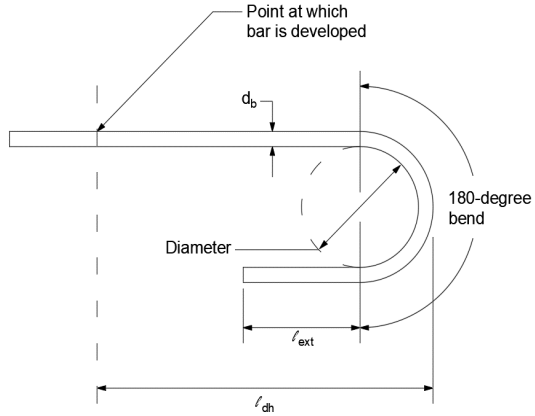

$l_{dh} = l_d$

l_{ext}=Greater of $4 d_b$ and 2.5"

Minimum bend diameters (ACI 318, Chapter 25.3.1)

$6 d_b$ (No. 3 through No. 8)

$8 d_b$ (No. 9 through No. 11)

Variables

l_d = rebar development length for tension, in

l_{st} = rebar splice length for tension, in

l_{dh} = rebar development length for tension on a standard hook, in

l_{ext} = straight extention at end of standard hook, in

f_y = specified yield strength of nonprestressed reinforcement, psi

ψ_t = casting position modification factor

ψ_e = reinforcement coating modification factor

λ = lightweight concrete modification factor

f_c' = specified compressive strength of concrete, psi

d_b = nominal diameter of bar, in

TABLE 2 - STANDARD LAP SPLICE LENGTHS FOR GR60 VERTICAL REBAR

Vertical Rebar Minimum Lap Length (in)

	Normal Weight Concrete Compressive Concrete Strength (psi)				Lightweight Concrete Compressive Concrete Strength (psi)			
Bar Size	**3000**	**4000**	**5000**	**6000**	**3000**	**4000**	**5000**	**6000**
#3	23	20	19	17	30	26	24	23
#4	30	26	24	23	39	34	32	28
#5	37	32	29	26	49	43	38	36
#6	45	38	36	32	58	51	46	42
#7	64	55	50	46	85	73	65	60
#8	73	63	58	52	97	84	75	69

Values are tabulated based on the following assumptions:

$f_y = 60{,}000\text{psi}$

ψ_t =1.0 (vertical rebar)

$\psi_e = 1.0$ (uncoated or galvanized reinforcement)

NOTE: Class B tension lap splice

TABLE 3 - STANDARD LAP SPLICE LENGTHS FOR GR60 HORIZONTAL REBAR

Horizontal Rebar Minimum Lap Length (in)

	Normal Weight Concrete Compressive Concrete Strength (psi)				Lightweight Concrete Compressive Concrete Strength (psi)			
Bar Size	**3000**	**4000**	**5000**	**6000**	**3000**	**4000**	**5000**	**6000**
#3	29	26	23	21	39	34	30	28
#4	39	34	30	28	51	45	39	36
#5	49	42	37	34	63	55	49	45
#6	58	50	45	41	76	65	59	54
#7	82	72	64	59	110	95	85	78
#8	94	82	73	67	125	108	97	89

Values are tabulated based on the following assumptions:

$f_y = 60{,}000\text{psi}$

ψ_t =1.3 (more than 12" of concrete below horizontal bar)

$\psi_e = 1.0$ (uncoated or galvanized reinforcement)

NOTE: Class B tension lap splice

CORNER REINFORCEMENT

Because of the RediCor Form System's factory assembly process, the following corner details are typically provided for horizontal rebar in concrete shear cores.

TYPICAL HORIZONTAL REINFORCEMENT AT CORE CORNER
SINGLE MAT - PLAN VIEW

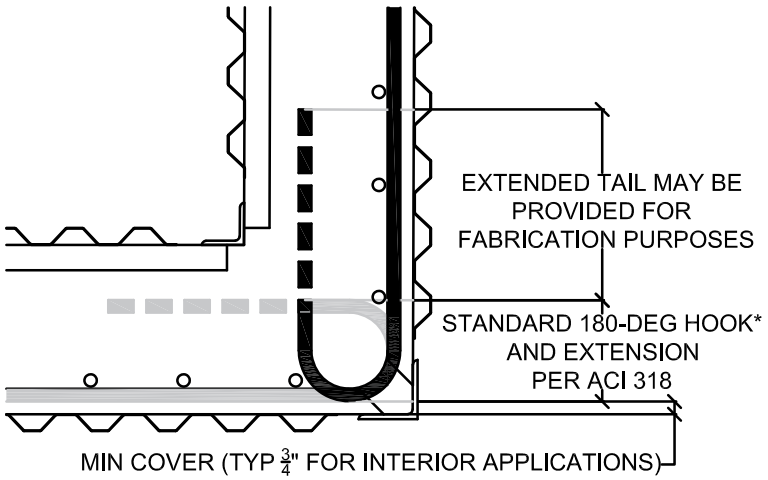

*Standard inside diamter of 180-deg hook per ACI 318 is used as a minimum requirement.
Actual inside diameter may be provided larger for fabrication purposes.

TYPICAL HORIZONTAL REINFORCEMENT AT CORE CORNER
DOUBLE MAT - PLAN VIEW

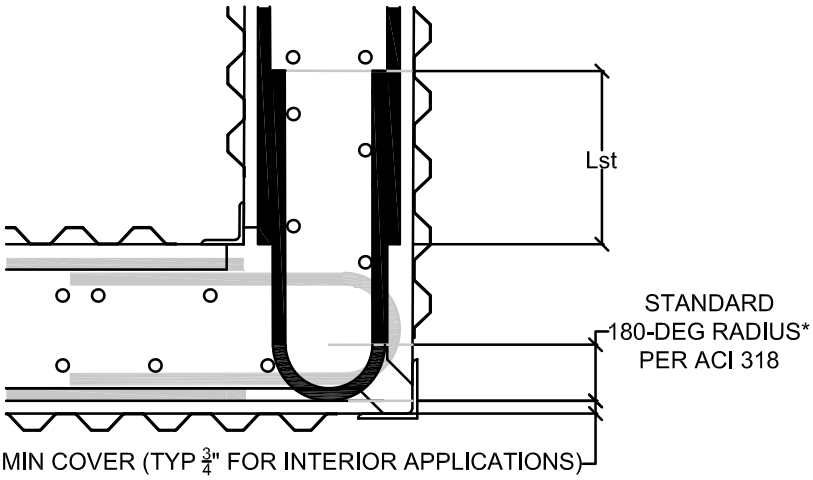

*Standard inside diamter of 180-deg hook per ACI 318 is used as a minimum requirement.
Actual inside diameter may be provided larger for fabrication purposes.

FIGURE 25 – STANDARD CORNER DETAIL FOR HORIZONTAL REINFORCEMENT

Due to restrictions imposed by the internal form structure, the first piece of longitudinal reinforcement for each wall will occur approximately 7" from the corner of the core (or edge of shear wall). The specifying professional must take this into consideration during their design. Required area of rebar will be maintained, though exact spacing may vary (i.e. for an 8" o.c. specified spacing, some reinforcing bars may be spaced slightly closer or slightly further than 8" o.c.). Spacing of longitudinal reinforcement measured along a line parallel to the wall will not vary from the specified spacing by more than +/- 3". Longitudinal reinforcement may move freely in its wire alignment pocket during construction. The specifying professional must take this into account during design of the wall for out-of-plane loads. Reference Figure 28 and Table 12 for more information on typical reinforcing zones.

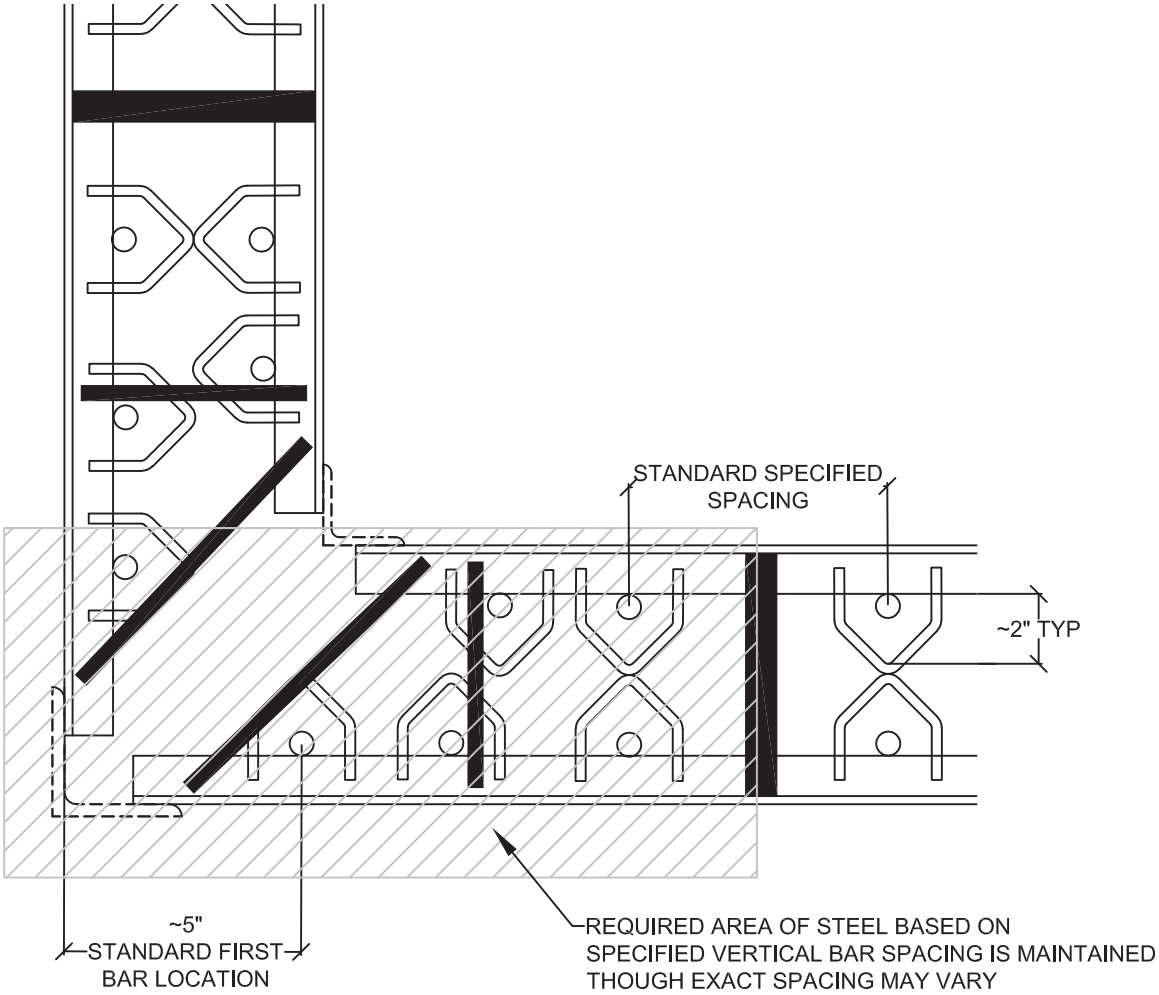

FIGURE 26 – STANDARD CORNER REINFORCING DETAIL FOR VERTICAL REINFORCEMENT

HORIZONTAL REBAR – STANDARD MAT

Horizontal rebar must be specified with a minimum spacing of 8” on center.

VERTICAL REBAR - STANDARD MAT

Vertical rebar must be specified with a minimum spacing of 5” on center.

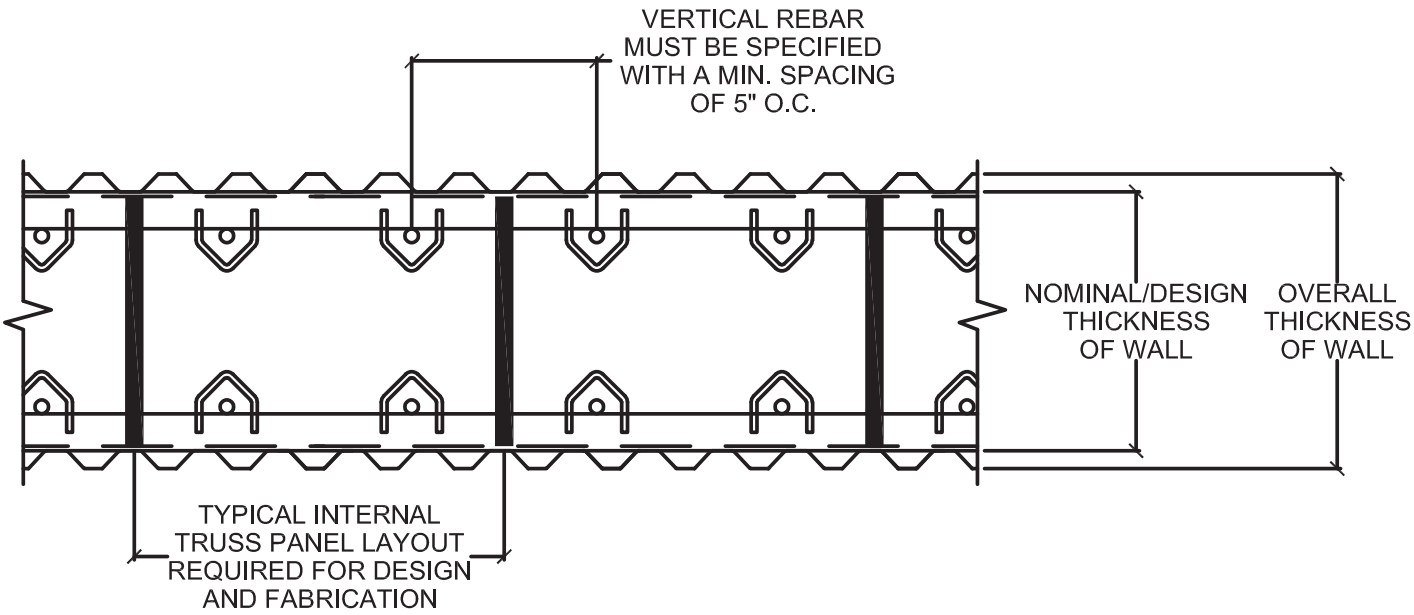

FIGURE 27 –VERTICAL REBAR SPACING

Notes:
1. Horizontal rebar spacing may be specified in any 1” increment greater than or equal to 8” on center.
2. Some bar sizes are not practical for all nominal wall thicknesses. Reference Table 13 for Maximum Horizontal Reinforcing Bar Size Per Wall Thickness.
3. Horizontal bars larger than #8 will encroach on the vertical rebar zone in Figure 28, this reduced vertical rebar zone must be considered with specifying the rebar mat.
4. Spacing should be specified to the nearest 1” increment (i.e. a maximum spacing of 9-1/2” should be specified as 9”). Some bar sizes are not practical for all nominal wall thicknesses due to fit up of the bend diameters at the corners. Reference table 13 for maximum horizontal reinforcing bar size per wall thickness. Horizontal bars larger than #8 will encroach on the vertical rebar zone in Figure 28, this reduced vertical rebar zone must be considered with specifying the rebar mat.

TYPICAL REINFORCING ZONES

The RediCor Form System can accommodate either a single or a double mat of rebar at the faces of the walls. A single, centered mat is not available due to the internal structure of the form system. The image and table below depict the typical reinforcing zones for a RediCor-formed shear wall.

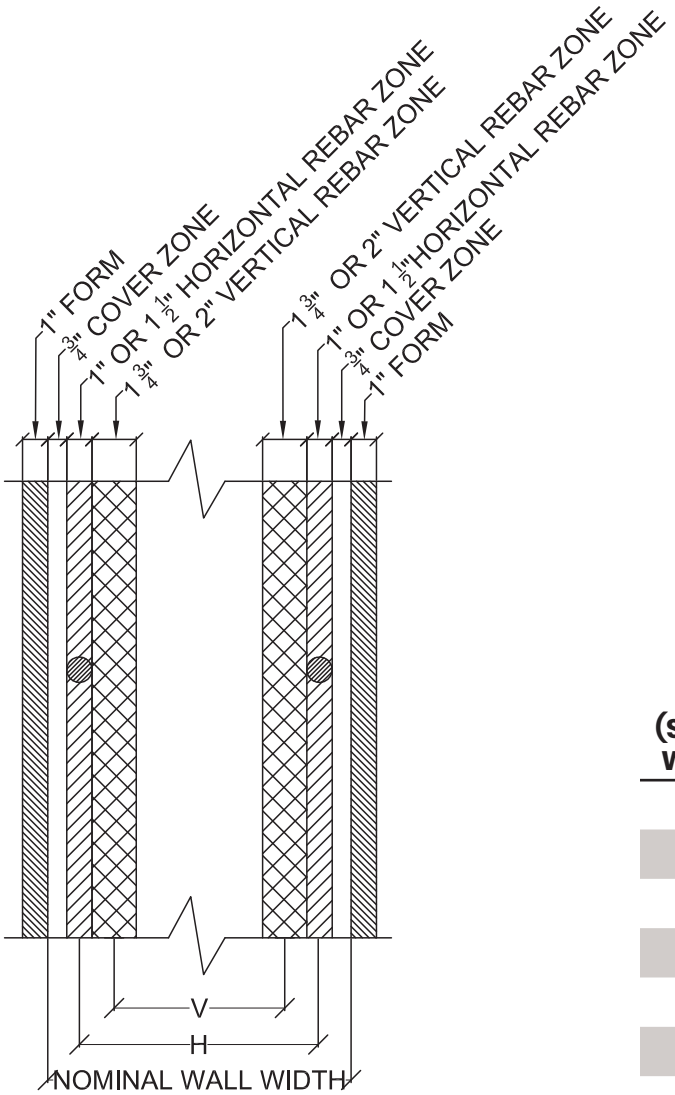

FIGURE 28 – REINFORCING ZONES

TABLE 12 – REINFORCING ZONE DIMENSIONS PER WALL THICKNESS

Nominal (Structural) Wall Width	Horizontal Rebar Zone (in)	Vertical Rebar Zone (in)	H (in)	V (in)
8”	1	1.75	5.5	2.75
10”	1	1.75	7.5	4.75
12”	1	2	9	6
14”	1	2	11	8
16”	1.5	2	12.5	9
18”	1.5	2	14.5	11
20”	1.5	2	16.5	13

Due to the 180-degree bends required for fabrication at the corners of the cores, some limitations exist for rebar sizes for the standard mat of the walls. The following table and detail describe these limitations.

TABLE 13 - MAXIMUM HORIZONTAL REINFORCING BAR SIZE PER WALL THICKNESS

Wall Thickness	Minimum Cover Requirements	Maximum Rebar Size
8"	3/4"	6
	1"[2]	6
	1 1/2"[2]	5
10"	3/4"	8
	1"[2]	8
	1 1/2"[2]	7
12"	3/4"	8
	1"[2]	8
	1 1/2"[2]	8
14"	3/4"	8
	1"[2]	8
	1 1/2"[2]	8
16"	3/4"	8
	1"[2]	8
	1 1/2"[2]	8
18"	3/4"	8
	1"[2]	8
	1 1/2"[2]	8
20"	3/4"	8
	1"[2]	8
	1 1/2 [2]	8

Notes:

1. Considers transverse reinforcement with standard 180-degree hooks per ACI 318-14 Table 25.3.1
2. Due to the internal formwork structure, it is recommended to specify the minimum required clear cover. Clear cover other than 3/4" can be provided with additional time and cost.
3. Reinforcing bars larger than #8 are not recommended for use with the RediCor Form System due to the extended lap lengths required for non-contact lap splices.

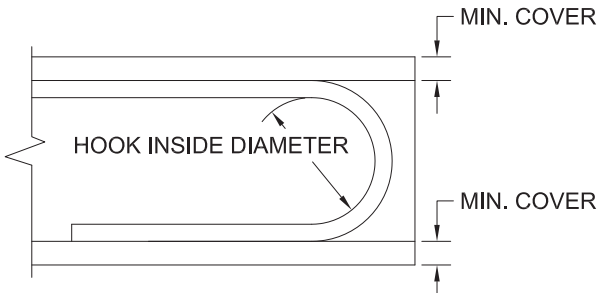

DIAGONAL REINFORCING BARS

Diagonal bars crossing module joints currently **CANNOT** be accommodated. This includes diagonal bars at corners of wall openings. The additional vertical and horizontal reinforcement around openings as required by ACI 318 11.7.5 can be met. These diagonal corner bars are not required by ACI 318 and are typically used for crack control and aesthetic purposes. The RediCor Form System is stay-in-place, so aesthetically displeasing cracks will not be visible. Diagonally-reinforced coupling beams also cannot be accommodated.

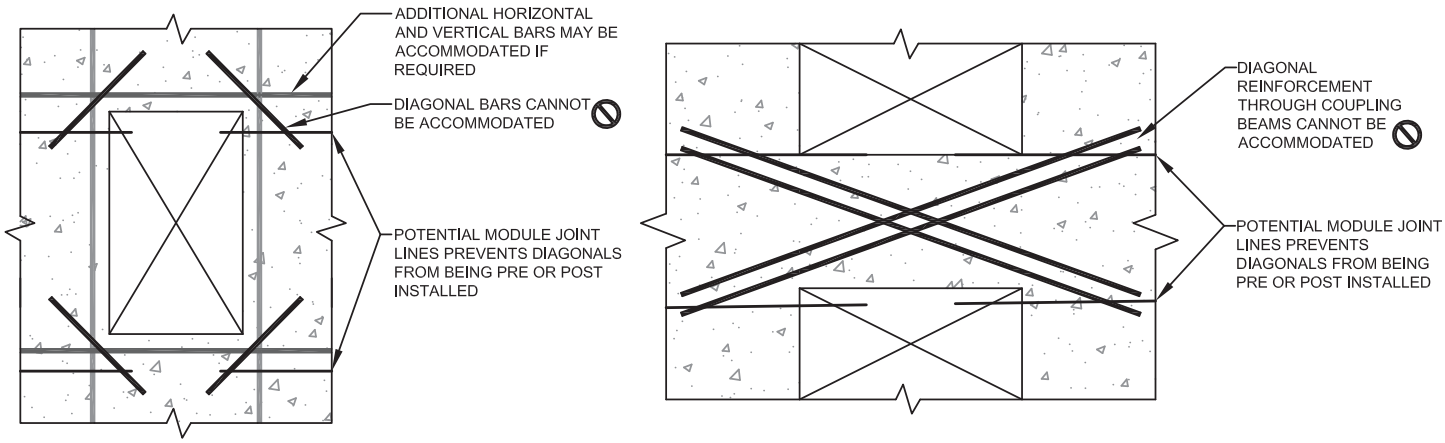

FIGURE 29 - DIAGONAL REINFORCING BARS NOT FOR USE WITH REDICOR

HEADER AND COUPLING BEAM REINFORCEMENT

The horizontal wall segments between two large openings, such as those for doors, may be designed as pinned-pinned (header for gravity load only) or as fixed-fixed(coupling beam transferring loads between wall segments). Design of such beams may require increased horizontal reinforcement surrounded by vertical stirrups for shear reinforcement and confinement of compression bars.

Special consideration for the fabrication process is needed in these more heavily reinforced areas. Figure 30 and Table 14 indicate available reinforcement zones. In some instances, removable form walers may be required to resist form pressure when internal truss chords must be removed for header or coupling beam reinforcement. Due to internal RediCor support framing, there is also a zone in the center of each wall inaccessible to this reinforcement. The nominal thickness of the wall may be controlled by the reinforcing zone of the beam and the required concrete cover, because the reinforcement may not be moved closer to the center of the wall in any case.

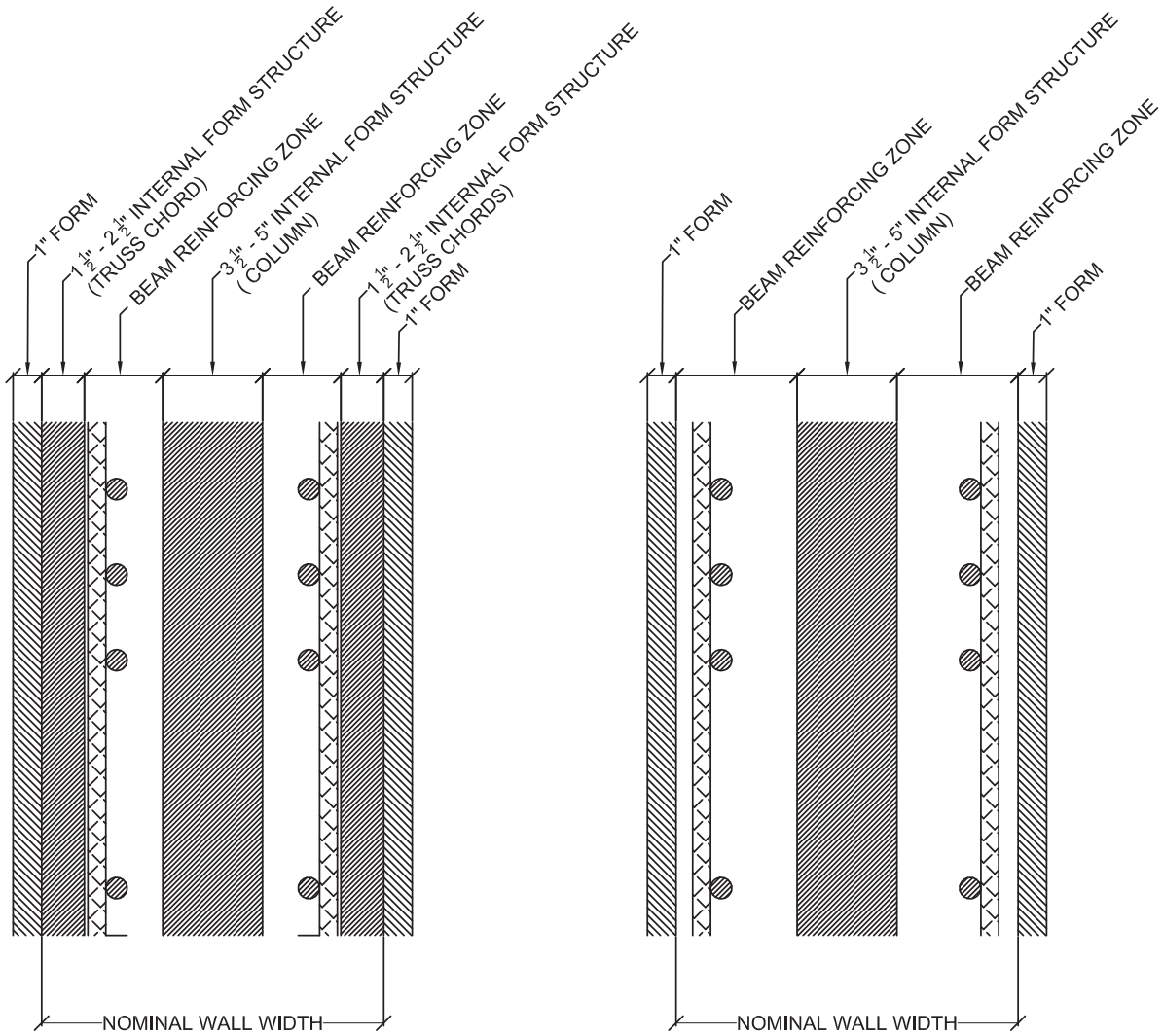

BEAM REINFORCING ZONE
NO REMOVABLE FORM WALERS

BEAM REINFORCING ZONE
WITH REMOVABLE FORM WALERS

FIGURE 30 – BEAM REINFORCING ZONES

TABLE 14 – BEAM REINFORCING ZONES

Nominal Wall Thickness	Beam Reinforcing Zone, in (no walers)	Beam Reinforcing Zone, in (with walers)
8"	0.75	2.25
10"	1.75	3.25
12"	2.25	4.25
14"	2.875	4.875
16"	3.875	5.875
18"	4.875	6.875
20"	5.00	7.50

Whenever the required cover for header or coupling beam reinforcement is less than the dimension of the horizontal internal truss chord leg (Ref. Figure 1)steel angle walers will be required to accommodate the reinforcement and ensure the strength of the formwork. These walers can be removed as soon as concrete is solidified to the extent that fluid pressure is removed from the form walls behind the walers.

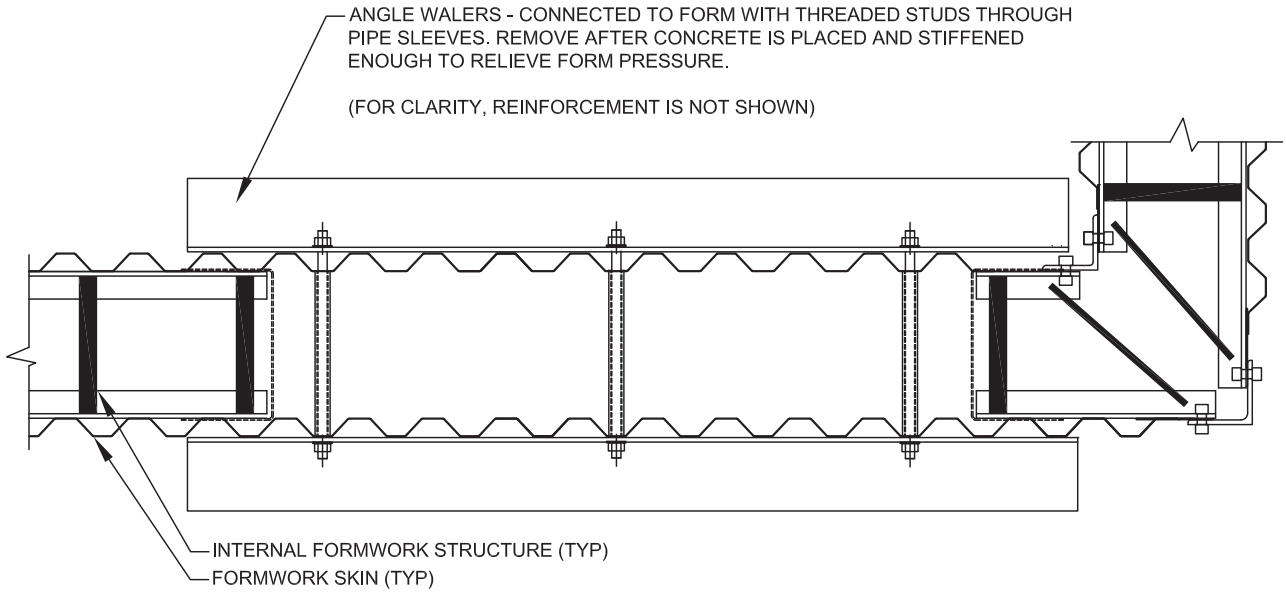

FIGURE 31: REMOVABLE FORM WALERS REQUIRED FOR SOME BEAM REINFORCEMENT CONDITIONS

FOUNDATION CONNECTION

There are two standard options for connecting the base of a RediCor-formed shear wall to the foundation or stem wall below: mechanical couplers with threaded field connections or steel embed plates with welded field connections. In both cases, Vulcraft provides the design of this connection and the components of this connection to be installed on site. Stamped calculations for this connection will be provided to the specifying professional for review and approval.

Mechanical Foundation Connection

RediCor's standard mechanical foundation connection includes threaded rebar couplers attached to rebar dowels which are cast into the foundation concrete. Vertical reinforcement placed into the base module is then threaded into position to create a mechanical splice. Vulcraft provides the mechanical couplers with the appropriate deformed bar dowels. A dimensioned plan will also be provided for locating the mechanical couplers prior to placement of foundation concrete.

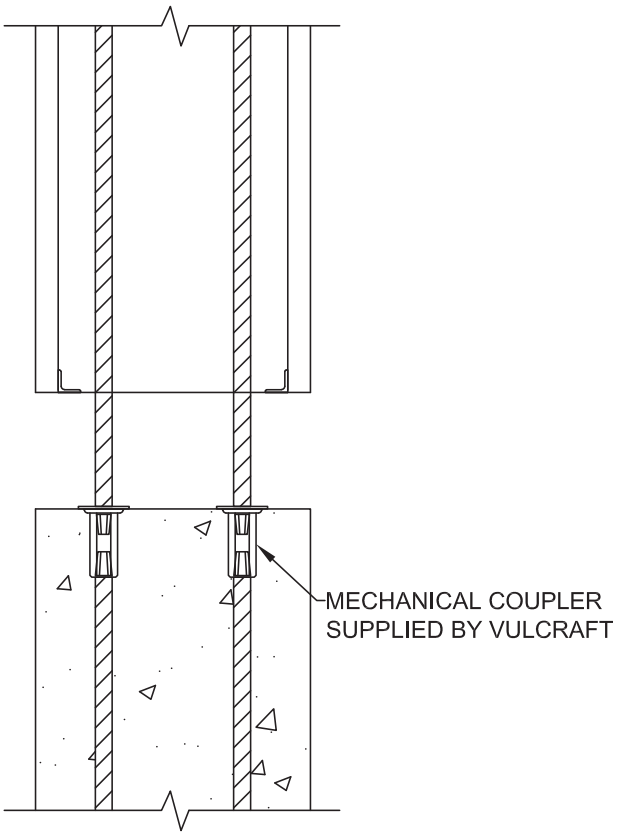

FIGURE 32 - MECHANICAL FOUNDATION CONNECTION

Welded Foundation Connection

RediCor's standard welded foundation connection consists of a steel embed plate with deformed bar dowels attached to the bottom of the plate as shown in Figure 33. Vertical reinforcement for the base module is supplied with spade plates factory-welded to the bottom of each reinforcing bar. These spade plates must then be welded onto the embed plate on site as shown in Figure 34.

A small amount of offset is acceptable from the reinforcing bars above the embed plate to the reinforcing bars below the embed plate. To allow for proper force transfer, a stiffener may be required below the embed plate. Allowable offset dimensions will be supplied on a per-project basis.

FIGURE 33 - EMBED PLATE FOR WELDED FOUNDATION CONNECTION

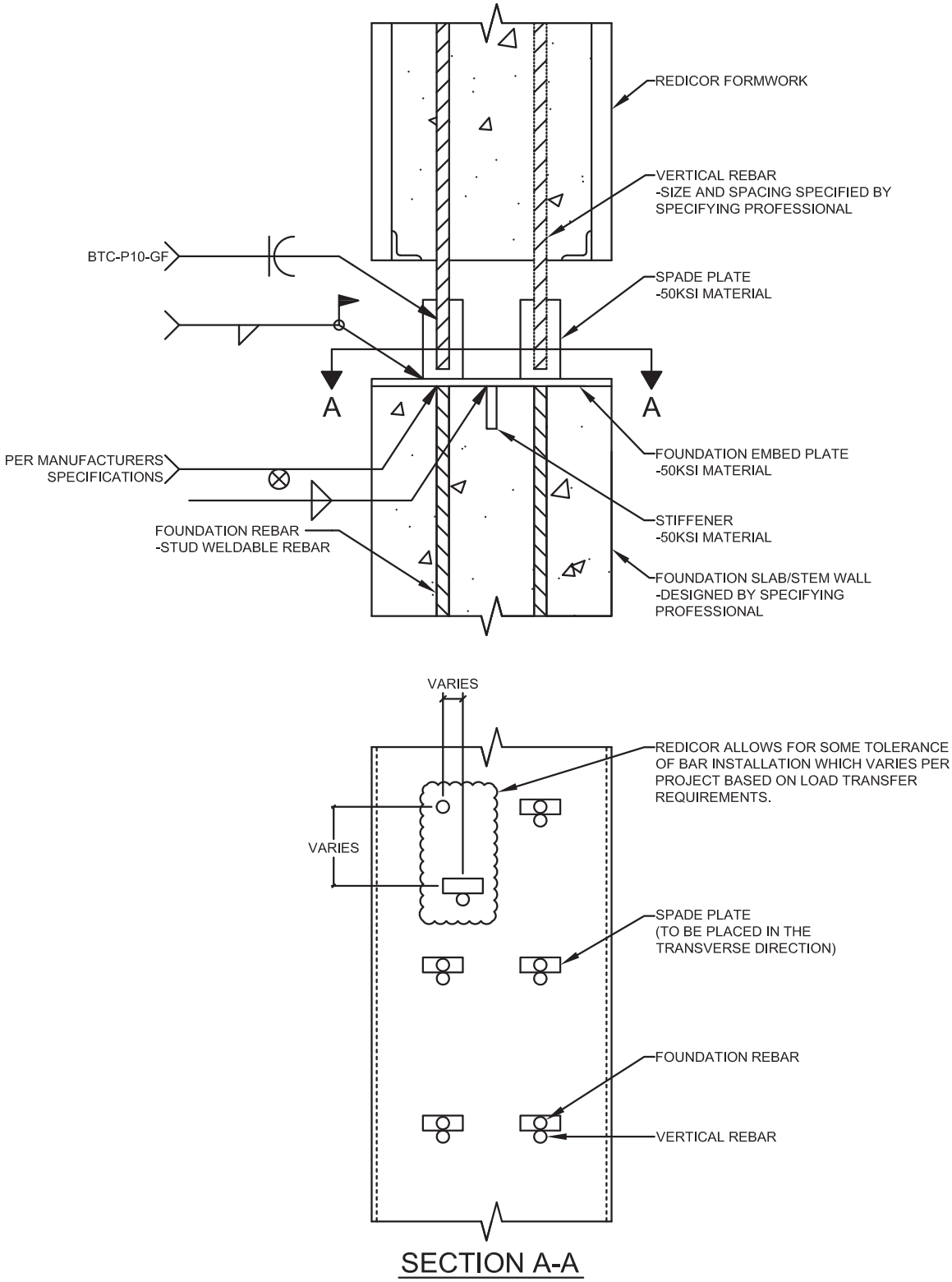

FIGURE 34 – REDICOR WELDED FOUNDATION CONNECTION DETAIL

FLOOR AND ROOF FRAMING CONNECTIONS

Vulcraft provides the materials and design of all floor and roof connections framing into the RediCor Form System. To the greatest extent possible, all connecting materials will be pre-installed in the form system. This includes embed plates, shear tabs, clip angles, deck ledger angles, and any deformed bar dowels required within the walls.

All of Vulcraft's connection design calculations are reviewed, signed, and sealed by a licensed professional engineer. These calculations are provided to the specifying professional for approval.

LOADING DUE TO FLOOR AND ROOF FRAMING CONNECTIONS

All loads required for connection design must be supplied to Vulcraft by the specifying professional. Temporary construction loads must also be provided to take advantage of the form system's load-bearing capabilities prior to concrete placement. If temporary construction loads are not provided, **Vulcraft will consider a 20psf construction live load in addition to the self-weight of the framing member and any metal deck it is supporting**. In no case should floor slabs be placed nor should heavy material unrelated to RediCor installation be stored on the floors prior to concrete placement in the form system.

FIGURE 35 - PRE-INSTALLED CONNECTING MATERIAL FOR FLOOR FRAMING

HOW TO SPECIFY DEMANDS ON CONNECTIONS FRAMING INTO REDICOR-FORMED WALLS

The specifying professional provides loads for all connections framing into RediCor-formed walls. Loads should be broken down into tension/compression, shear, and gravity. Lateral loads must be clearly indicated as ASD or LRFD. Additional direction must be provided for amplified drag loads as required. Vulcraft will then design, detail, and supply all connection material at the RediCor-formed wall. If a specific connection type is preferred (i.e. shear tab, clip angle), please notify Vulcraft prior to design.

Reference Figure 20 for further information on specifying demands on RediCor-formed walls.

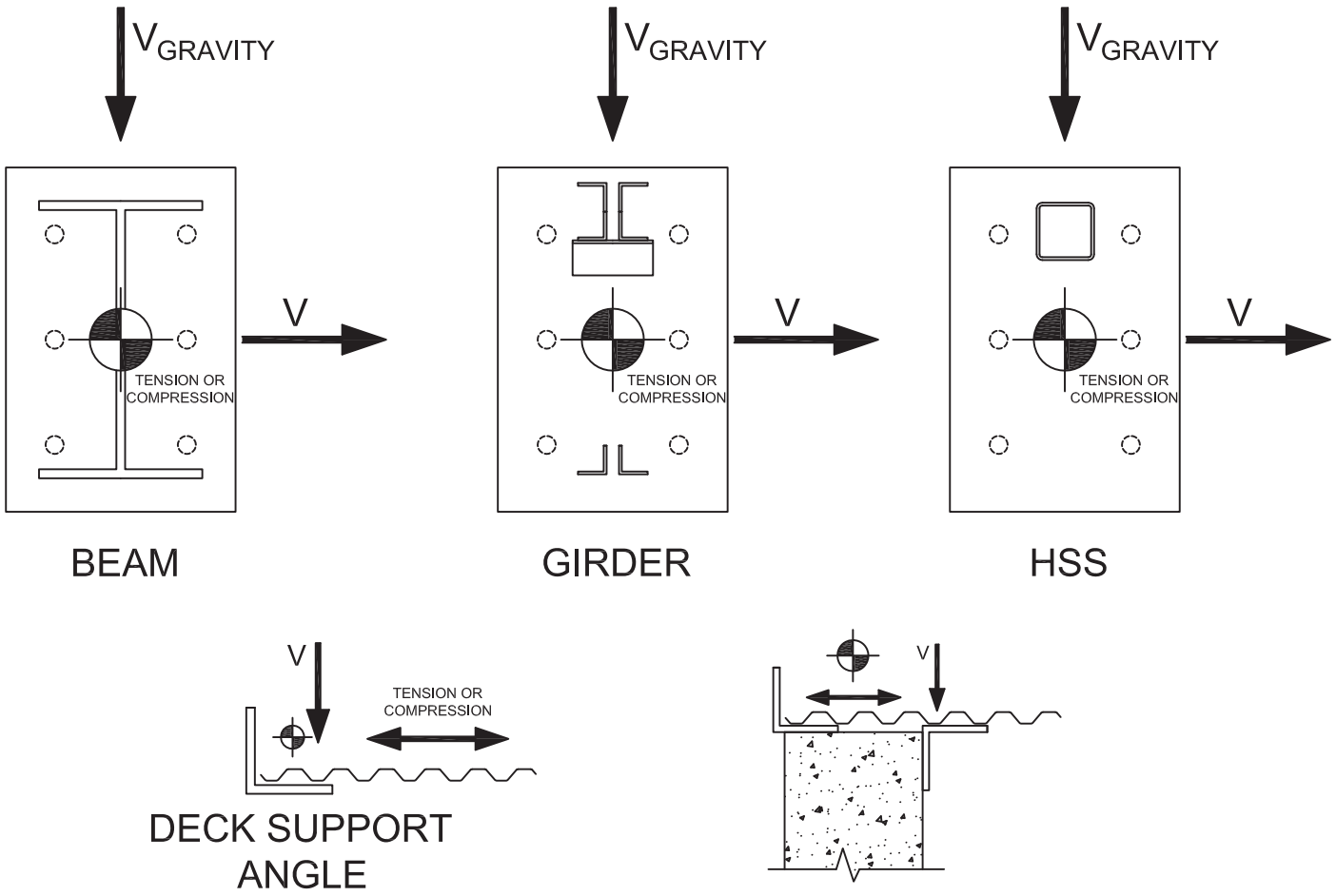

FIGURE 36: EMBED LOADS

SLAB TO WALL CONNECTION

For low diaphragm shear applications, the standard RediCor detail for attaching the floor slab to the wall is a steel angle attached to the wall with headed bolts. The design of the shelf angle and the headed bolts is by Vulcraft. The design of the deck attachment to the shelf angle is beyond Vulcraft's scope and is the specifying professional's responsibility.

Shelf angles arrive on-site pre-installed on the form system. The shelf angle may be in a either toe-up or toe-down orientation at Vulcraft's discretion.

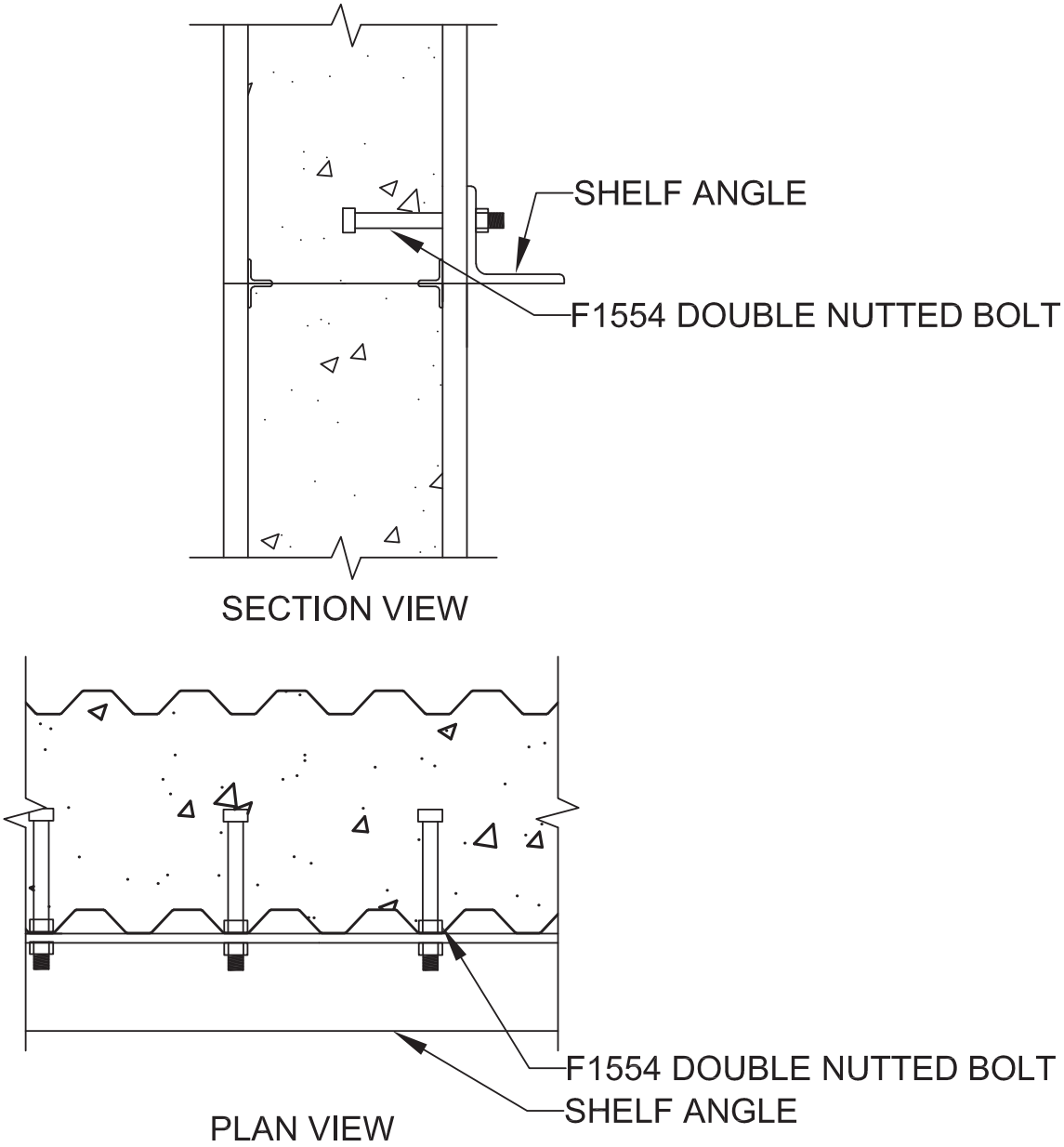

FIGURE 37 – STANDARD SLAB TO WALL CONNECTION FOR LOW SHEAR APPLICATIONS

The following tables list capacities for the connection of the shelf angle to the wall. These capacities have been calculated based solely on the capacity of the shelf angle, headed bolts, and wall concrete. The connection of the deck to the shelf angle has not been considered and must be addressed by the specifying professional.

TABLE 15 - L5X5X5/8" ATTACHED WITH F1554 GR. 105 5/8" DIAMETER DOUBLE NUTTED BOLTS @ 32" O.C.

Shelf Angle Shear Capacity (PLF)

Vertical Shear (PLF)	Out-of-Plane Anchorage Force (tension) (PLF)						
	0	150	250	500	1000	2500	3500
150	3102	3102	3102	3102	2735	1513	692
250	3102	3102	3102	3022	2614	1385	-
500	3102	2992	2909	2703	2289	1006	-
1000	2387	2254	2165	1939	1467	-	-
1600	1038	792	587	-	-	-	-

1. 4000psi NW concrete, minimum 12" on edges of anchor, minimum 9" above and below anchors
2. Anchors located in gage of angle
3. Effective depth = 5-1/2"

TABLE 16 - L6X4X1/2" (LONG LEG DOWN) ATTACHED WITH F1554 GR. 105 5/8" DIAMETER DOUBLE NUTTED BOLTS @ 32" O.C.

Shelf Angle Shear Capacity (PLF)

Vertical Shear (PLF)	Out-of-Plane Anchorage Force (tension) (PLF)						
	0	150	250	500	1000	2500	3500
150	3102	3102	3102	3102	2792	1570	750
250	3102	3102	3102	3102	2710	1481	642
500	3102	3102	3102	2896	2483	1214	-
1000	2794	2664	2577	2358	1909	-	-
1600	1940	1780	1669	1373	581	-	-

1. 4000psi NW concrete, minimum 12" on edges of anchor, minimum 9" above and below anchors
2. Anchors located in gage of angle
3. Effective depth = 5-1/2"

For high diaphragm shear applications, the attachment of the deck to the shelf angle may not be sufficient to transfer the required shear force into the shelf angle, and additional attachment of slab to shear reinforcement may be required. The standard RediCor detail for this application uses a pre-installed rebar half-coupler. Vulcraft-provided, threaded rebar dowels are field installed prior to placement of the floor slab. Rebar half-couplers and dowels into the slab are designed by Vulcraft.

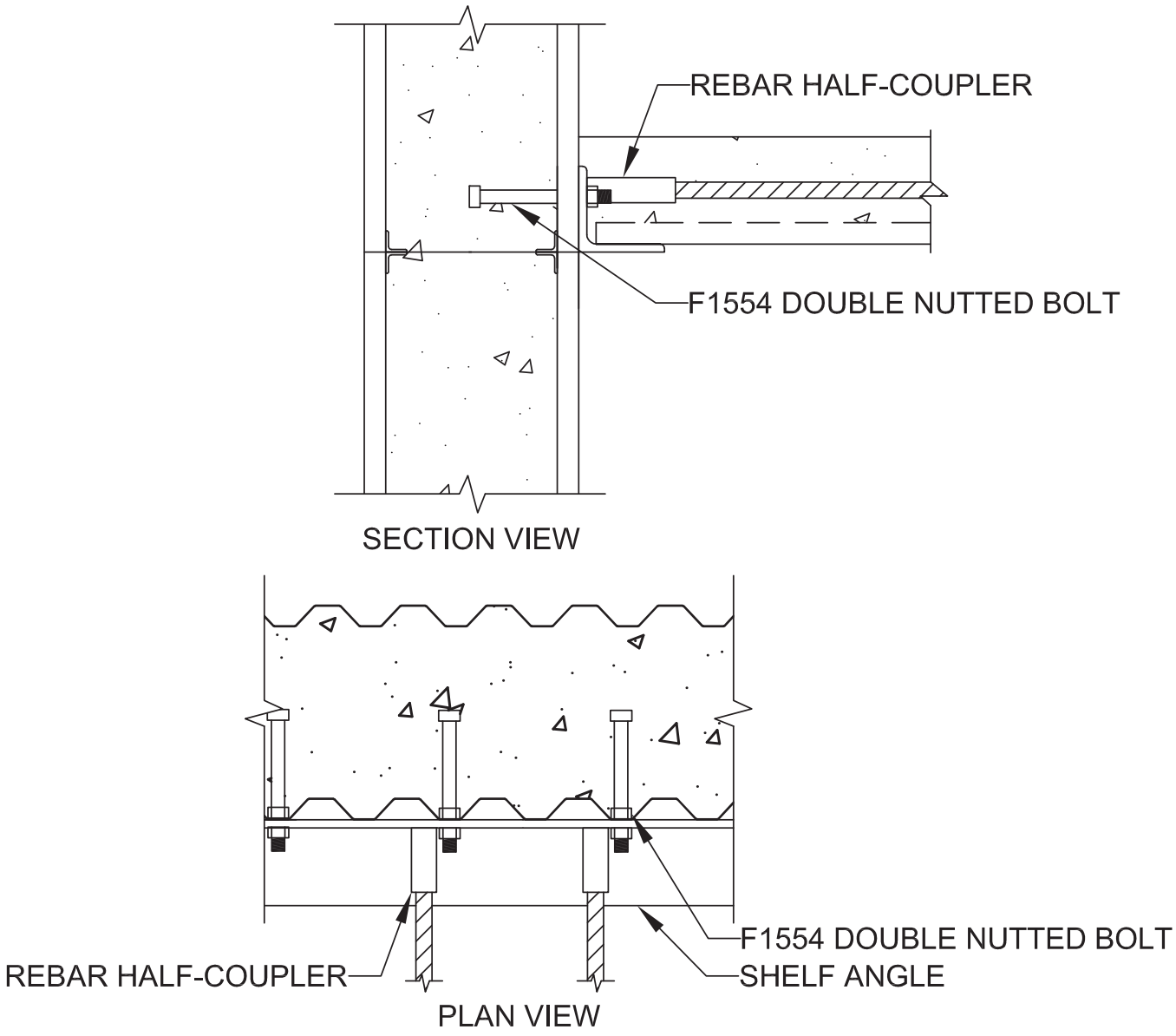

FIGURE 38 – STANDARD SLAB TO WALL CONNECTION FOR HIGH SHEAR APPLICATIONS

The following table lists the capacity of a deformed reinforcing dowel into the floor slab. For shelf angle, headed bolt, and wall capacity, reference Tables 15, 16. The diaphragm shear capacity of the floor slab must be addressed by the specifying professional.

TABLE 17 - STANDARD DIAPHRAGM SHEAR CAPACITIES BASED ON DOWEL STRENGTH ONLY (KLF)

Bar Size and Spacing	Ultimate Shear Capacity*
#4 @ 24"	2.34
#5 @ 24"	3.63
#4 @ 12"	4.68
#5 @ 12"	7.25

$f_{uta} = 60{,}000$ psi

*Shear capacity is based on steel strength only the specifying professional is responsible for checking concrete breakout and pryout strength

Notes:

1. Center of rebar is located 1" above top of deck
2. Rebar is fully developed into the concrete
3. Slab must be analyzed and designed by specifying professional
4. RediCor is not responsible for checking slab for concrete failure at rebar dowels

STANDARD EMBED PLATES

All required embed plates for floor or roof framing arrive on site pre-installed in the RediCor Form System. Vulcraft provides the design of the embed plates including the headed studs and any additional shear reinforcement required for the wall. Sealed calculations will be submitted to the specifying professional for review.

Due to the unique construction-load-bearing capacity of the form system prior to concrete placement, the embed plates have a minimum width of 16”-24” and must span between two internal truss members which may cause the plates to appear oversized.

The following details and tables indicate capacities for RediCor’s standard embed plates. These standard plates are used when possible, however, for loads exceeding their capacity, alternate embed plate designs or ‘sandwich’ plates (plates on both sides of the wall connected with through-bolts) may be supplied to meet the demand of the connection.

Standard Embed Connection Tables

The images and tables that follow describe RediCor’s standard embed connections for use with the RediCor Form System. Vulcraft reserves the right to provide alternate materials and connections that meet the specified load requirements or geometries for the project.

Wherever referenced in the following embed connection details, field and edge conditions are as shown in Figures 39 and 40, respectively.

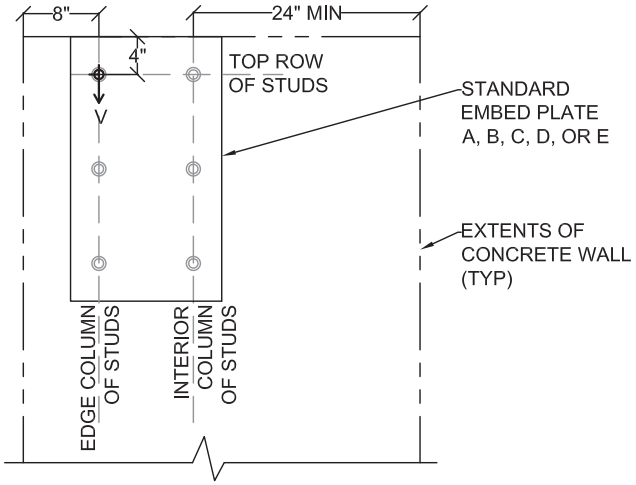

FIGURE 39 - EDGE CONDITION
EMBED DIMENSIONS

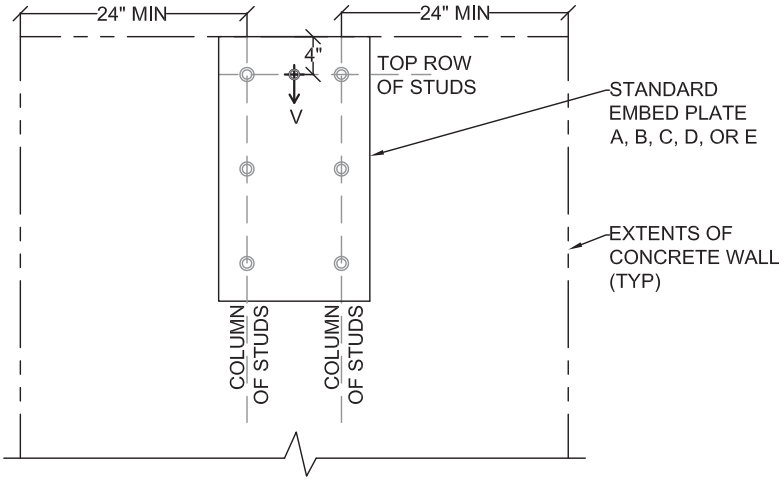

FIGURE 40 - FIELD CONDITION
EMBED DIMENSIONS

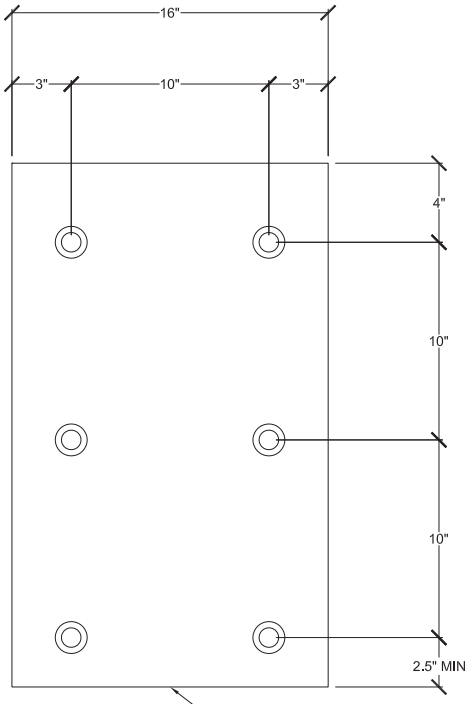

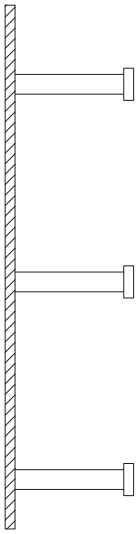

EMBED PL $\frac{1}{2}$" x 1'-4" x 2'-2 $\frac{1}{2}$"
W/ 1" x 6" HAS

EDGE CONDITION WITHOUT HAIRPINS[2]	
TENSION(K)	SHEAR (K)
0	7.1
5	6.5
10	4.8
15 MAX*	1.4

* BREAKOUT CONTROLLED

EDGE CONDITION WITH HAIRPINS[2]	
TENSION(K)	SHEAR (K)
0	40.8
5	33.8
10	25
15 MAX*	7.8

* BREAKOUT CONTROLLED

FIELD CONDITION WITHOUT HAIRPINS[3]	
TENSION(K)	SHEAR (K)
0	37.3
5	31.3
10	23
16.5 MAX*	1.2

* BREAKOUT CONTROLLED

NOTE:
PLATE BENDING MUST BE CHECKED FOR TENSION LOADS OF 18K OR HIGHER

1 / TS — EMBED A

CAPACITY CALCULATION ASSUMPTIONS
1. RIGID PLATE BEHAVIOR
2. EDGE CONDITION
   -ANALYZED WITH LOAD LOCATED 8" FROM VERTICAL EDGE OF SLAB
   -TOP OF PLATE ALIGNED WITH TOP OF SLAB
   -ASSUMES LOAD IS LOCATED 4" FROM TOP OF PLATE
   -1ST COLUMN OF STUDS LOCATED 8" FROM VERTICAL EDGE OF SLAB
3. FIELD CONDITION
   -24" TOP AND SIDE EDGE DISTANCE FROM STUDS
   -ANALYZED WITH LOAD CENTERED ON PLATE HORIZONTALLY AND 4" FROM THE TOP
4. SEE TYP. HAIRPIN DETAIL FOR HAIRPIN SIZE AND CONFIGURATION
5. HEADED ANCHOR STUD ASSUMED TO HAVE A MINIMUM YIELD STRENGTH OF 55KSI
6. 4000PSI MINIMUM CONCRETE (CRACKED) COMPRESSIVE STRENGTH
7. CAPACITIES BASED OFF OF 8" CORE WALLS

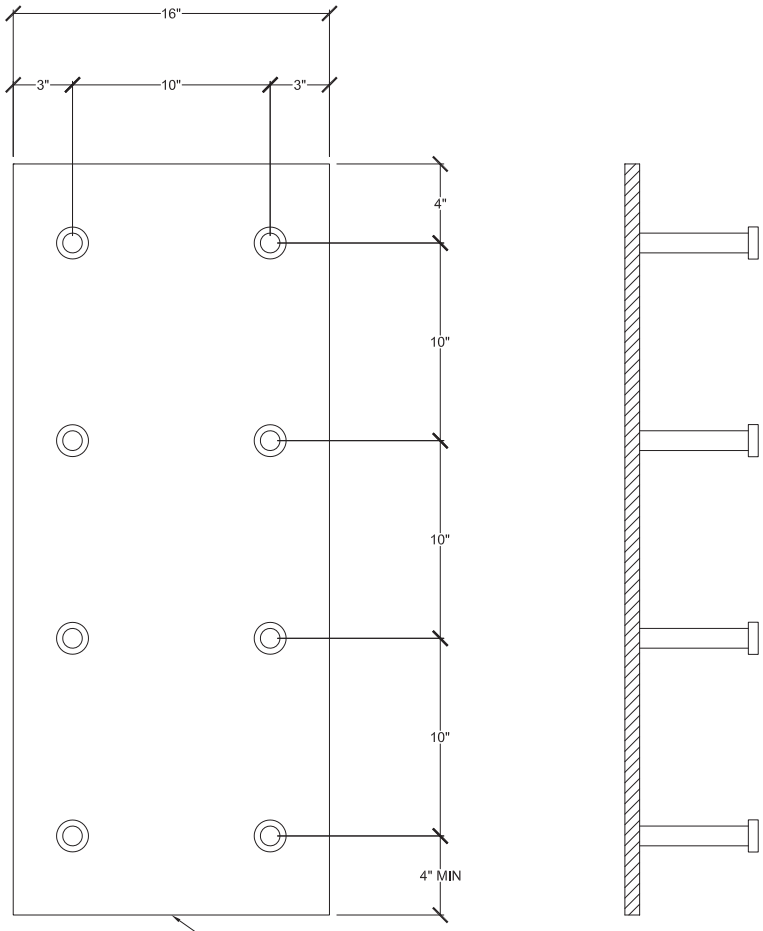

EMBED PL 1/2" x 1'-4" x 3'-2"
W/ 1" x 6" HAS

1
TS
EMBED B

EDGE CONDITION WITHOUT HAIRPINS[2]	
TENSION(K)	SHEAR (K)
0	9.6
5	8.9
10	6.9
16.6 MAX*	1

*BASED ON BREAKOUT

EDGE CONDITION WITH HAIRPINS[2]	
TENSION(K)	SHEAR (K)
0	58.8
5	49.6
10	35
16.6 MAX*	1

*BASED ON BREAKOUT

FIELD CONDITION WITHOUT HAIRPINS[3]	
TENSION(K)	SHEAR (K)
0	43.5
5	38.5
10	30.7
19 MAX*	1

*BASED ON BREAKOUT

NOTE:
PLATE BENDING MUST BE CHECKED FOR TENSION LOADS OF 18K OR HIGHER

CAPACITY CALCULATION ASSUMPTIONS

1. RIGID PLATE BEHAVIOR
2. EDGE CONDITION
   -ANALYZED WITH LOAD LOCATED 8" FROM VERTICAL EDGE OF SLAB
   -TOP OF PLATE ALIGNED WITH TOP OF SLAB
   -ASSUMES LOAD IS LOCATED 4" FROM TOP OF PLATE
   -1ST COLUMN OF STUDS LOCATED 8" FROM VERTICAL EDGE OF SLAB
3. FIELD CONDITION
   -24" TOP AND SIDE EDGE DISTANCE FROM STUDS
   -ANALYZED WITH LOAD CENTERED ON PLATE HORIZONTALLY AND 4" FROM THE TOP
4. SEE TYP. HAIRPIN DETAIL FOR HAIRPIN SIZE AND CONFIGURATION
5. HEADED ANCHOR STUD ASSUMED TO HAVE A MINIMUM YIELD STRENGTH OF 55KSI
6. 4000PSI MINIMUM CONCRETE (CRACKED) COMPRESSIVE STRENGTH
7. CAPACITIES BASED OFF OF 8" CORE WALLS

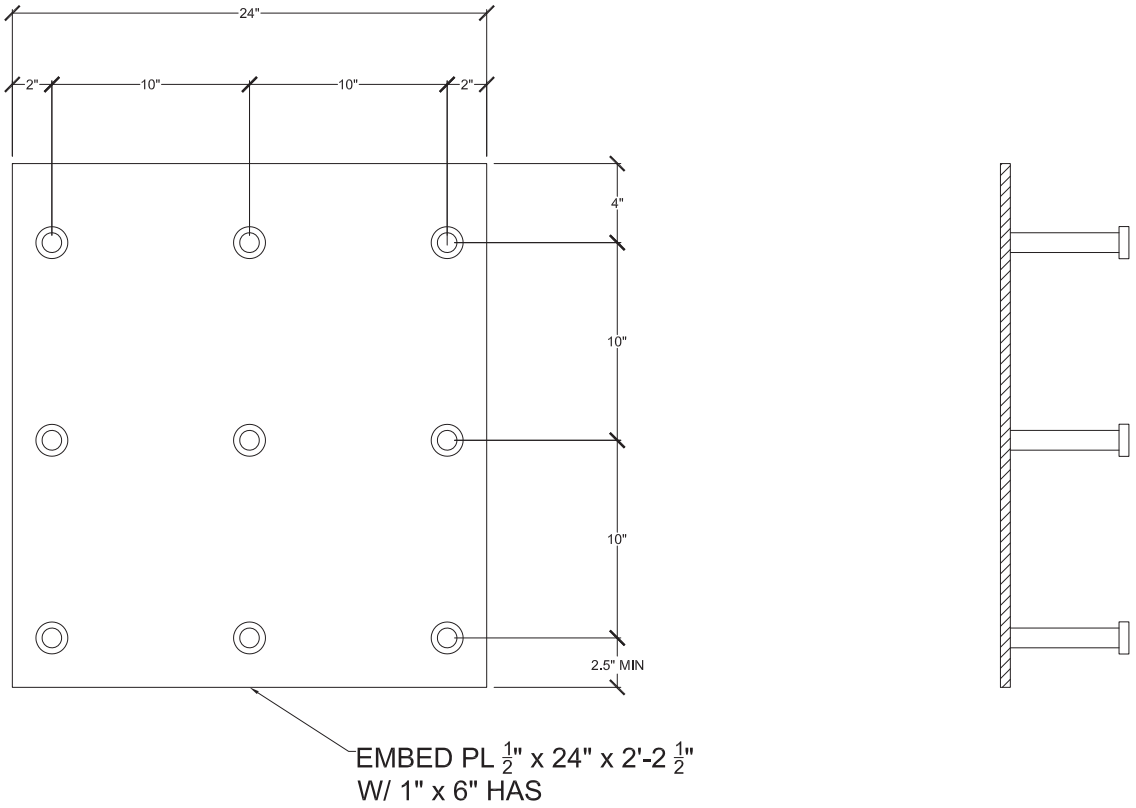

EDGE CONDITION WITHOUT HAIRPINS[2]	
TENSION(K)	SHEAR (K)
0	7.2
5	6.7
10	5.4
17.5 MAX*	0

*BASED ON BREAKOUT

EDGE CONDITION WITH HAIRPINS[2]	
TENSION(K)	SHEAR (K)
0	44.6
5	39.5
10	30
17.5 MAX*	0

*BASED ON BREAKOUT

FIELD CONDITION WITHOUT HAIRPINS[3]	
TENSION(K)	SHEAR (K)
0	37.4
10	29
20	12.3
22.7 MAX*	1.8

*BASED ON BREAKOUT

NOTE:
PLATE BENDING MUST BE CHECKED FOR TENSION LOADS OF 27K OR HIGHER

1/TS EMBED C

CAPACITY CALCULATION ASSUMPTIONS

1. RIGID PLATE BEHAVIOR
2. EDGE CONDITION
   - -ANALYZED WITH LOAD LOCATED 8" FROM VERTICAL EDGE OF SLAB
   - -TOP OF PLATE ALIGNED WITH TOP OF SLAB
   - -ASSUMES LOAD IS LOCATED 4" FROM TOP OF PLATE
   - -1ST COLUMN OF STUDS LOCATED 8" FROM VERTICAL EDGE OF SLAB
3. FIELD CONDITION
   - -24" TOP AND SIDE EDGE DISTANCE FROM STUDS
   - -ANALYZED WITH LOAD CENTERED ON PLATE HORIZONTALLY AND 4" FROM THE TOP
4. SEE TYP. HAIRPIN DETAIL FOR HAIRPIN SIZE AND CONFIGURATION
5. HEADED ANCHOR STUD ASSUMED TO HAVE A MINIMUM YIELD STRENGTH OF 55KSI
6. 4000PSI MINIMUM CONCRETE (CRACKED) COMPRESSIVE STRENGTH
7. CAPACITIES BASED OFF OF 8" CORE WALLS

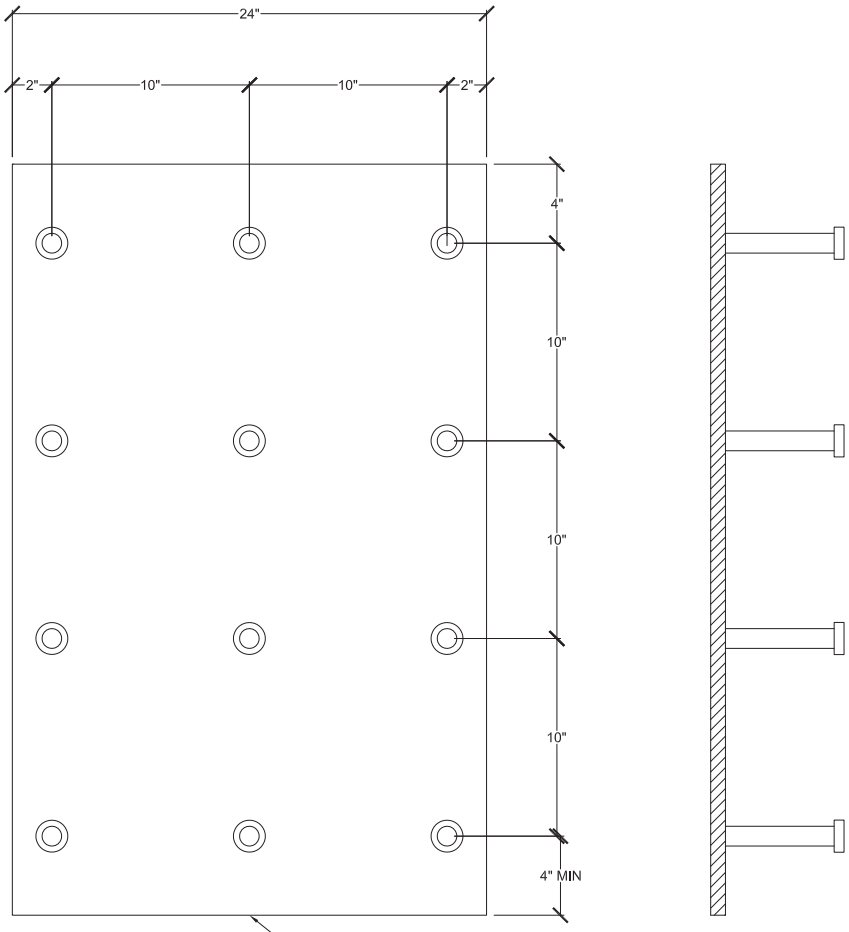

EMBED PL 1/2" x 2'-0" x 3'-2"
W/ 1" x 6" HAS

1 / TS — EMBED D

EDGE CONDITION WITHOUT HAIRPINS[2]	
TENSION(K)	SHEAR (K)
0	8.8
10	6.8
15	4.5
18.7 MAX*	1.7

*BASED ON BREAKOUT

EDGE CONDITION WITH HAIRPINS[2]	
TENSION(K)	SHEAR (K)
0	63.7
10	48
15	28
18.7 MAX*	2.5

*BASED ON BREAKOUT

FIELD CONDITION WITHOUT HAIRPINS[3]	
TENSION(K)	SHEAR (K)
0	28.5
10	24.5
20	14.7
26 MAX*	1.3

*BASED ON BREAKOUT

NOTE:
PLATE BENDING MUST BE CHECKED FOR TENSION LOADS OF 27K OR HIGHER

CAPACITY CALCULATION ASSUMPTIONS

1. RIGID PLATE BEHAVIOR
2. EDGE CONDITION
   - -ANALYZED WITH LOAD LOCATED 8" FROM VERTICAL EDGE OF SLAB
   - -TOP OF PLATE ALIGNED WITH TOP OF SLAB
   - -ASSUMES LOAD IS LOCATED 4" FROM TOP OF PLATE
   - -1ST COLUMN OF STUDS LOCATED 8" FROM VERTICAL EDGE OF SLAB
3. FIELD CONDITION
   - -24" TOP AND SIDE EDGE DISTANCE FROM STUDS
   - -ANALYZED WITH LOAD CENTERED ON PLATE HORIZONTALLY AND 4" FROM THE TOP
4. SEE TYP. HAIRPIN DETAIL FOR HAIRPIN SIZE AND CONFIGURATION
5. HEADED ANCHOR STUD ASSUMED TO HAVE A MINIMUM YIELD STRENGTH OF 55KSI
6. 4000PSI MINIMUM CONCRETE (CRACKED) COMPRESSIVE STRENGTH
7. CAPACITIES BASED OFF OF 8" CORE WALLS

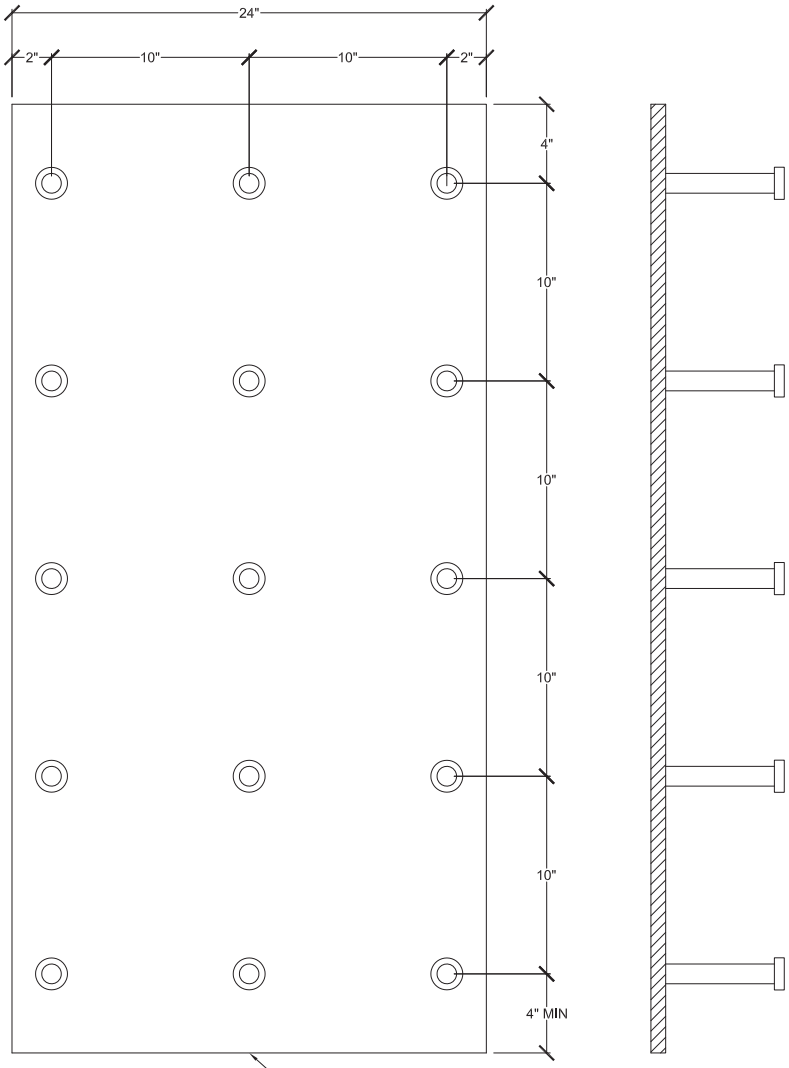

EMBED PL 1/2" x 2'-0" x 4'-0"
W/ 1" x 6" HAS

1
TS
EMBED E

EDGE CONDITION WITHOUT HAIRPINS[2]	
TENSION(K)	SHEAR (K)
0	10.4
10	8.7
20	3
21.2 MAX*	2

*BASED ON BREAKOUT

EDGE CONDITION WITH HAIRPINS[2]	
TENSION(K)	SHEAR (K)
0	68
10	67.5
20	19
21.2 MAX*	3.4

*BASED ON BREAKOUT

FIELD CONDITION WITHOUT HAIRPINS[3]	
TENSION(K)	SHEAR (K)
0	49.5
10	43.5
20	30.5
29.3 MAX*	2.6

*BASED ON BREAKOUT

NOTE:
PLATE BENDING MUST BE CHECKED FOR TENSION LOADS OF 27K OR HIGHER

CAPACITY CALCULATION ASSUMPTIONS

1. RIGID PLATE BEHAVIOR
2. EDGE CONDITION
   - -ANALYZED WITH LOAD LOCATED 8" FROM VERTICAL EDGE OF SLAB
   - -TOP OF PLATE ALIGNED WITH TOP OF SLAB
   - -ASSUMES LOAD IS LOCATED 4" FROM TOP OF PLATE
   - -1ST COLUMN OF STUDS LOCATED 8" FROM VERTICAL EDGE OF SLAB
3. FIELD CONDITION
   - -24" TOP AND SIDE EDGE DISTANCE FROM STUDS
   - -ANALYZED WITH LOAD CENTERED ON PLATE HORIZONTALLY AND 4" FROM THE TOP
4. SEE TYP. HAIRPIN DETAIL FOR HAIRPIN SIZE AND CONFIGURATION
5. HEADED ANCHOR STUD ASSUMED TO HAVE A MINIMUM YIELD STRENGTH OF 55KSI
6. 4000PSI MINIMUM CONCRETE (CRACKED) COMPRESSIVE STRENGTH
7. CAPACITIES BASED OFF OF 8" CORE WALLS

STANDARD EMBED PLATES – HAIRPINS

When increased shear breakout capacity is needed (i.e. near the corner of a core, or for loads exceeding those shown in the previous standard embed tables), hairpins are provided surrounding the headed studs at the back of the embed. This shear reinforcement mitigates concrete breakout limitations.

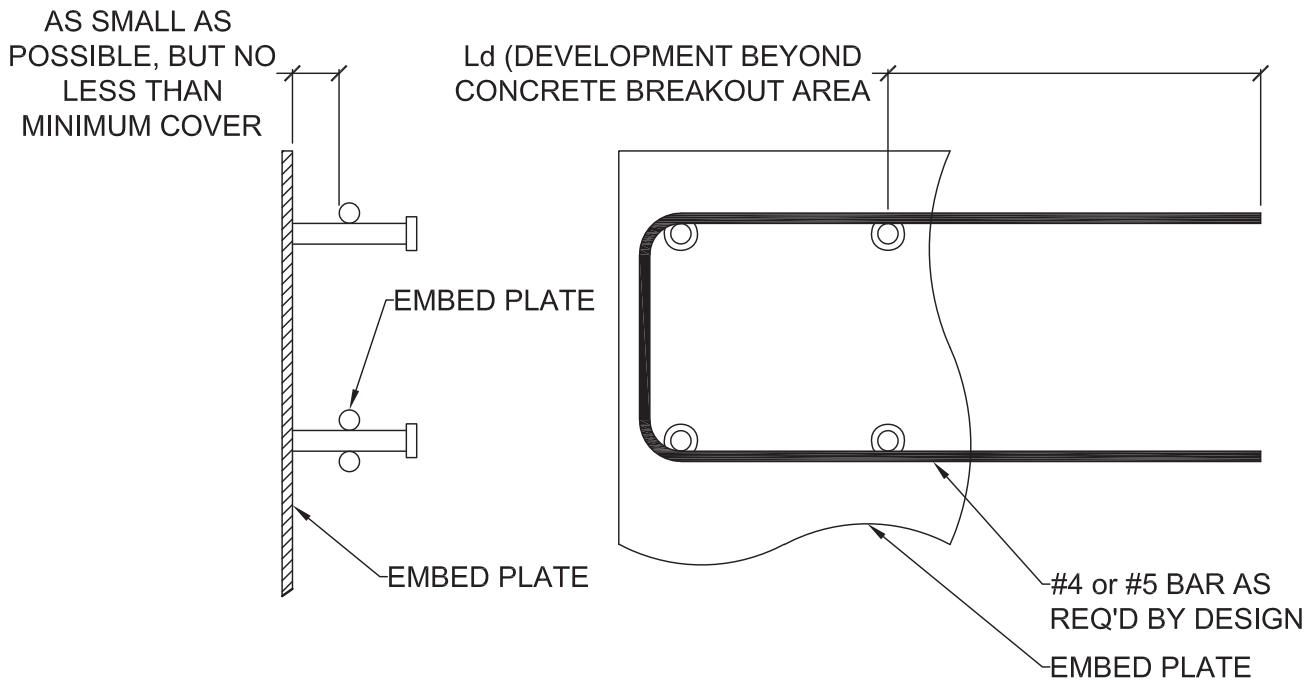

FIGURE 41 – STANDARD HAIRPIN DETAIL FOR EMBEDDED CONNECTIONS

STANDARD BEAM CONNECTIONS TO REDICOR-FORMED WALLS

Based on loading provided by the specifying professional, Vulcraft provides the design and pre-installed materials for the shear tab or clip angle required to attach a steel beam to the RediCor Form System and the RediCor-formed concrete wall. Bolts required for attachment are supplied by others. Any effect the connection has on the steel beam (i.e. reduced web or flange area due to copes) is beyond Vulcraft's scope.

Vulcraft will select the type of connection, unless a preference is indicated.

For gravity only connections, it is recommended that short slots be specified in the connection material (shear tab or clip angle) on both ends of any steel beam framing into the RediCor-formed walls to account for construction tolerances. Unless directed differently, Vulcraft will supply all gravity only connecting material with short slots. Connecting material on the opposite side of the beam is by others.

The following details show standard connections supplied by Vulcraft for steel beams framing into the RediCor Form System.

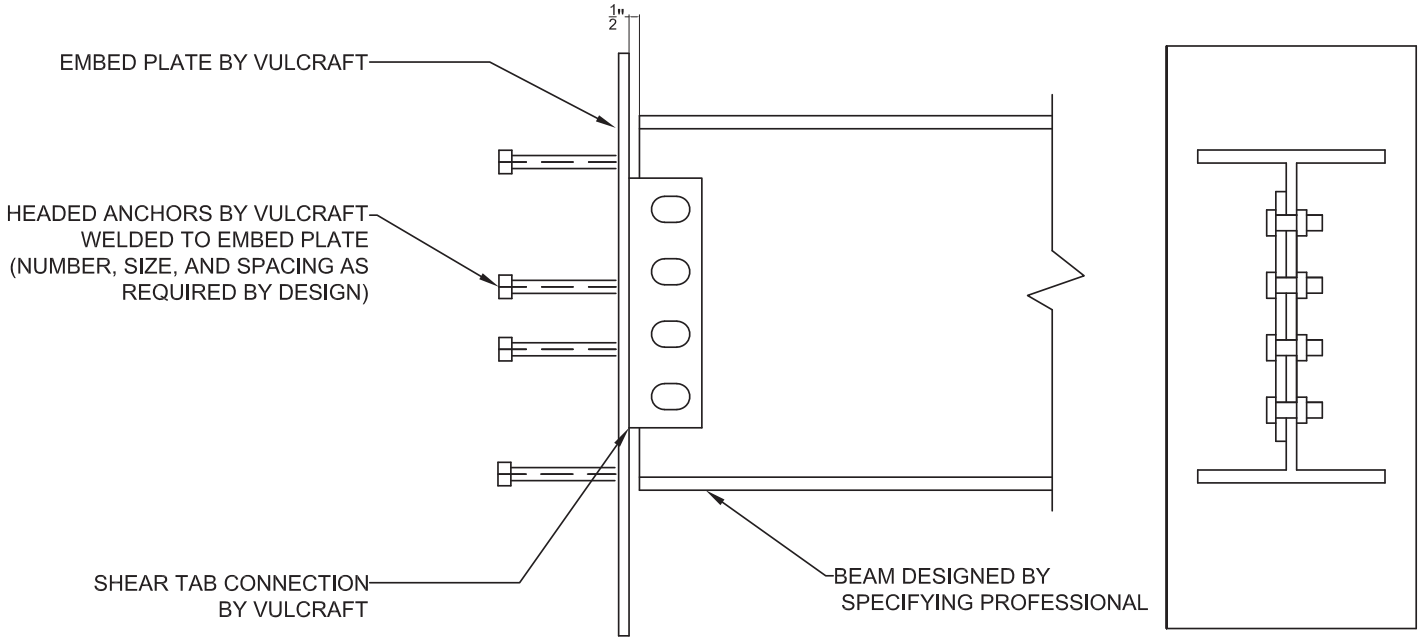

FIGURE 42- SHEAR TAB FOR W-SHAPED BEAM

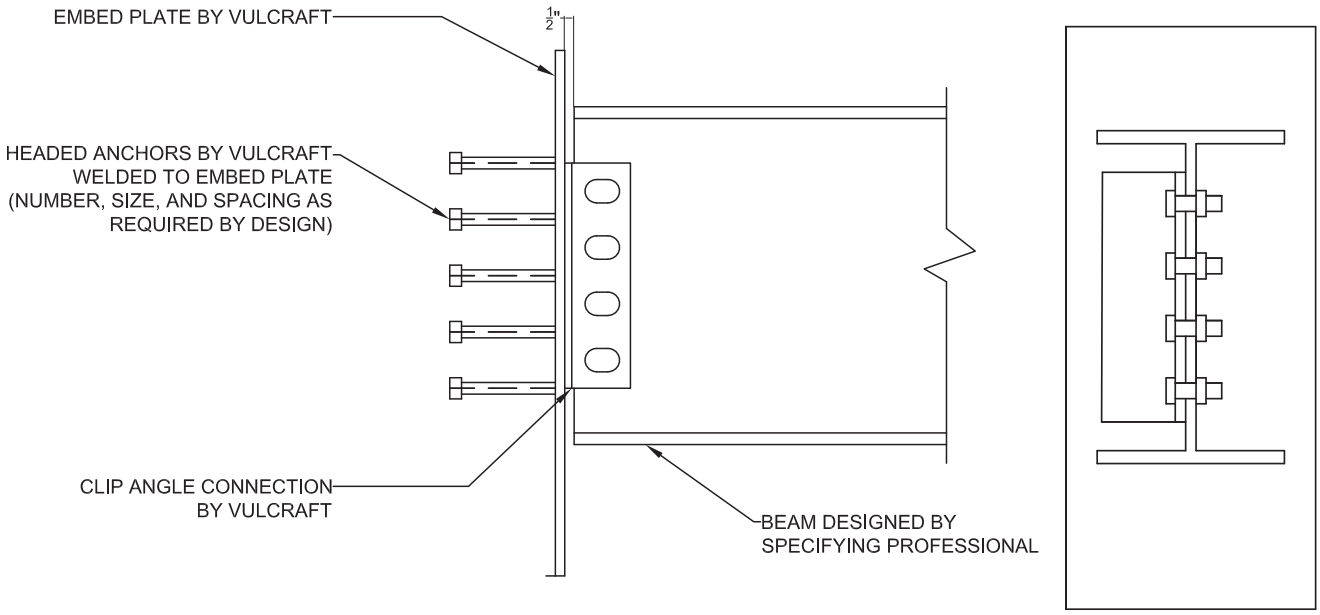

FIGURE 43 - SINGLE CLIP ANGLE FOR W-SHAPED BEAM

STANDARD STEEL JOIST AND JOIST GIRDER CONNECTIONS TO REDICOR-FORMED WALLS

Vulcraft provides connection design of the steel joist to the RediCor-formed walls. This includes design of the angle seat and its attachment to the embed plate. The design of the welded or bolted connection between the joist shoe and the angle seat is not by Vulcraft.

The following details illustrate the standard connections for joists and Joist Girders to the RediCor Form System.

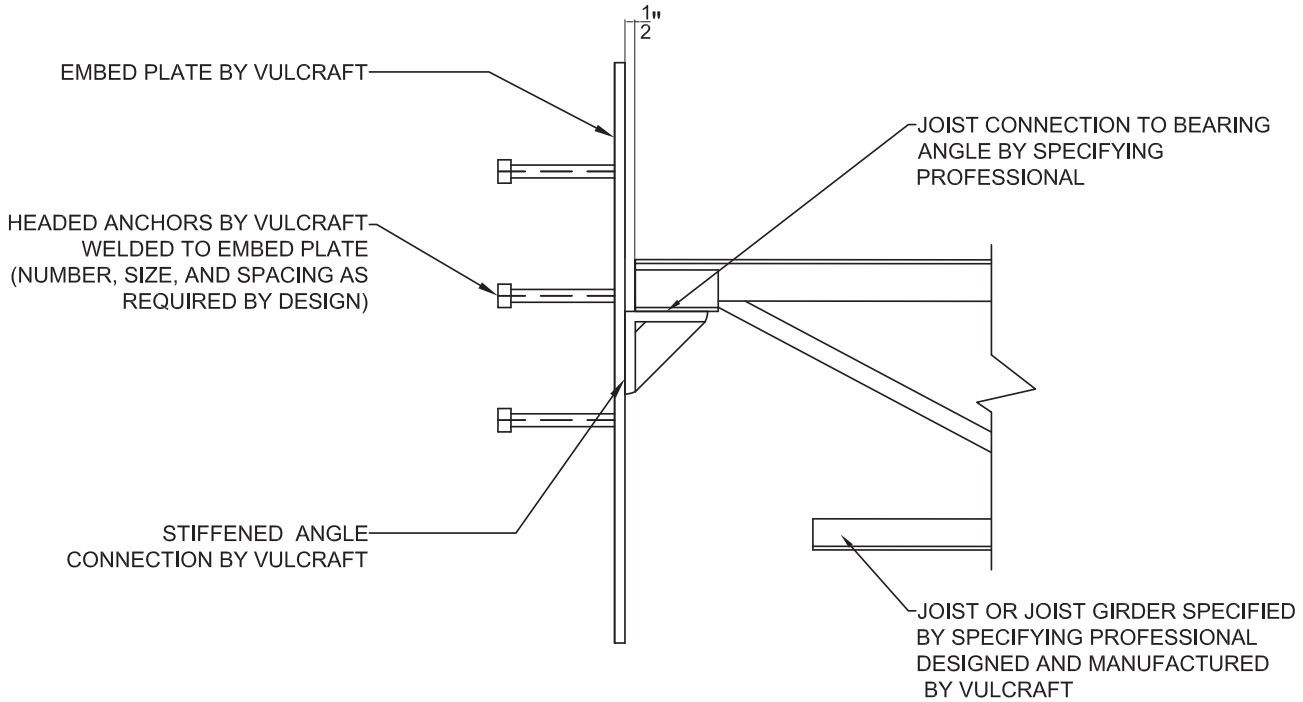

FIGURE 44 - TYPICAL SEATED ANGLE CONNECTION FOR OPEN WEB STEEL JOISTS

LOCATING GRAVITY-ONLY STEEL BEAMS CONNECTING TO REDICOR-FORMED WALLS

Though RediCor's standard embeds are designed with an edge condition eight inches from the edge of a wall, it is preferred that The centerline of any steel beam connecting to the system be located at least the nominal thickness of the wall from the corner of a core or edge of a single shear wall.

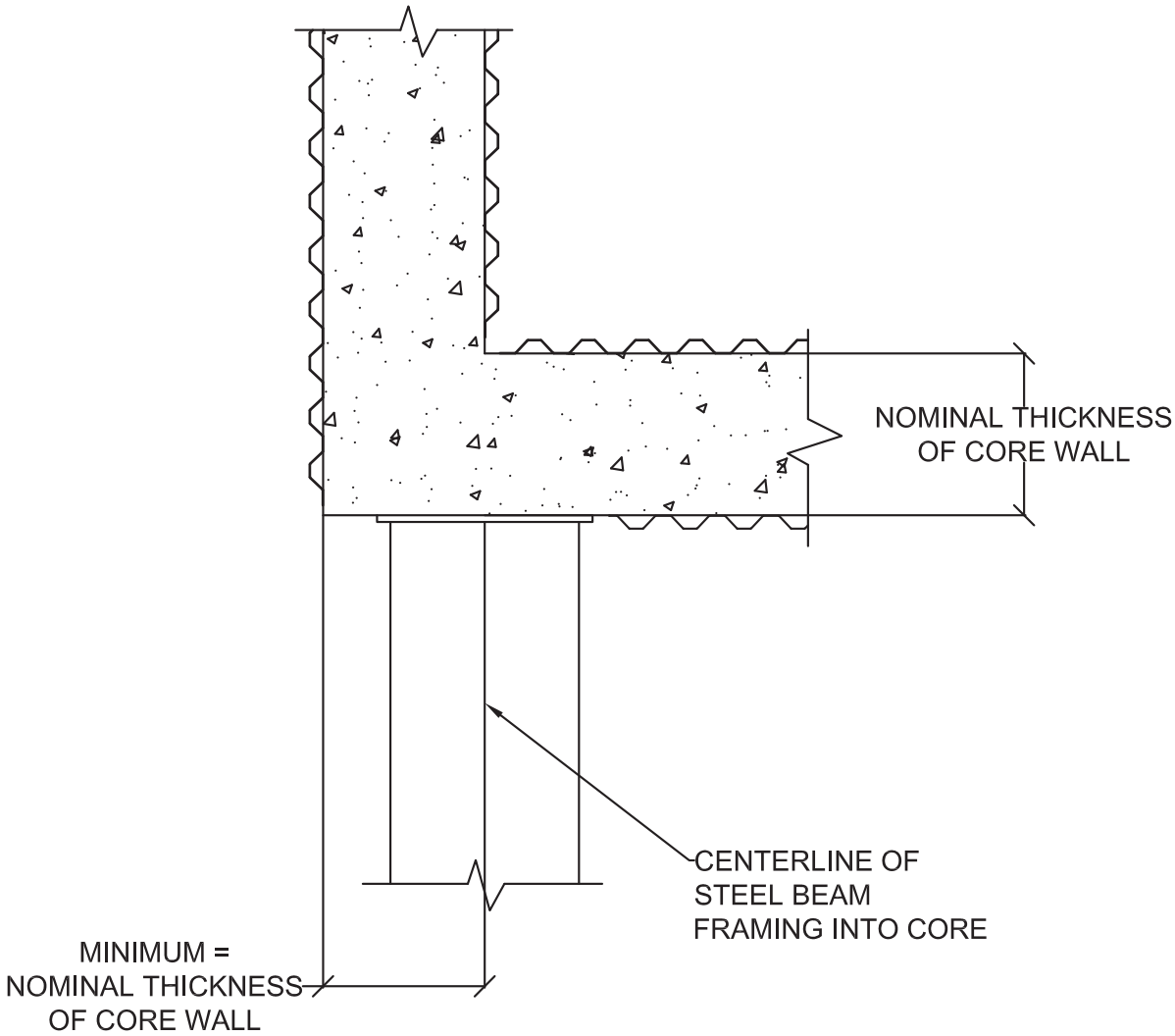

FIGURE 45 – LIMITS ON GRAVITY BEAM LOCATION NEAR CORNER OF CORE

DRAG STRUTS

Steel beams designed to transfer axial tension or compression loads to the shear core in many cases can be accommodated by the RediCor Form System. Vulcraft provides design of the embed plate and any materials such as deformed reinforcing dowels required to transfer the axial force into the shear core.

Due to the importance of aligning a drag strut with the shear wall it is transferring axial load into, special accommodations can be made for locating a drag strut beam at the centerline of a shear wall. However, an absolute minimum distance from the centerline of a beam to the edge of a core is 4" to accommodate the structure of the RediCor Form System.

Before specifying two drag struts at 90-degrees from each other at a common corner, special attention must be given to the detailing of the reinforcement. This condition may be impractical due to reinforcement congestion. Please contact Vulcraft for coordination as soon as possible in the decision making process for recommendations.

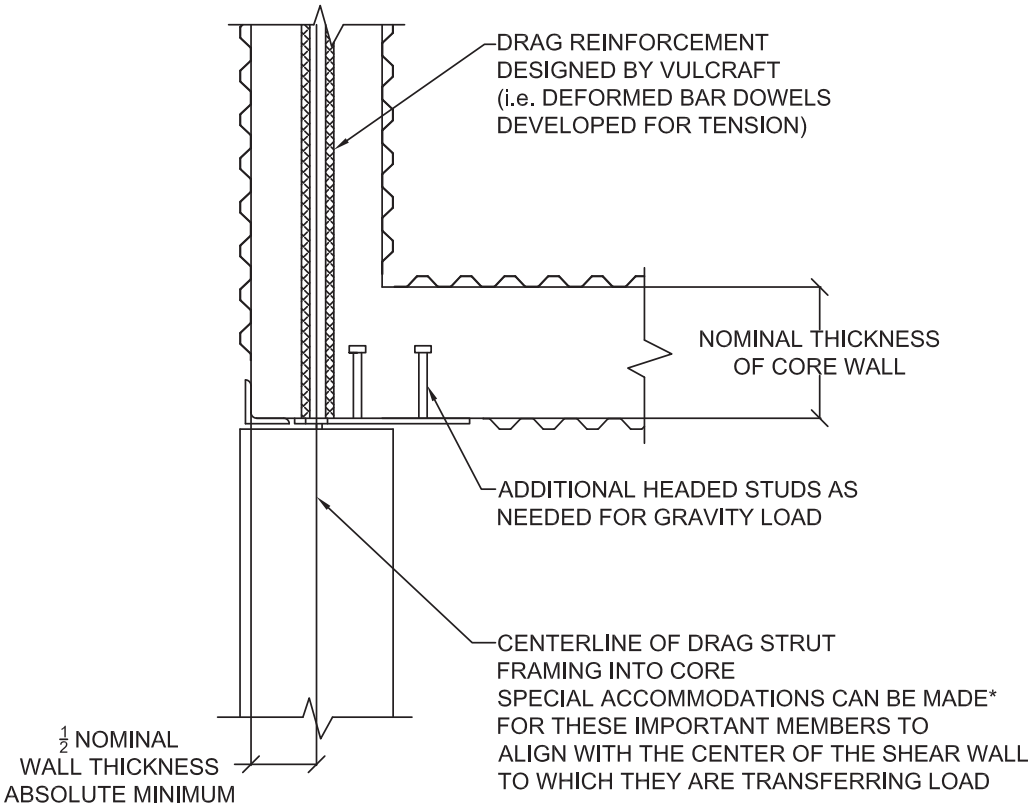

*CONTACT VULCRAFT FOR VIABILITY AND RECOMMENDATIONS
DURING SPECIFICATION

FIGURE 46 – DRAG STRUT ON REDICOR FORM SYSTEM

FIRE RESISTANCE OF REDICOR-FORMED WALLS

The International Building Code (IBC) should be referenced for determining minimum nominal concrete wall thickness for the appropriate fire-resistance period (ref. IBC 2015 Table 721.1(2)).

FIRE RESISTANCE OF FLOORS FRAMING INTO REDICOR-FORMED WALLS

Due to the metal deck corrugations at the form system exterior and the toe-up orientation of RediCor's typical shelf angle detail, an air gap may be created in the floor assembly at the face of a RediCor-formed wall. This air gap may need to be filled with fire resistive material in the field. Fire resistive material is not provided by, nor specified by, Vulcraft.

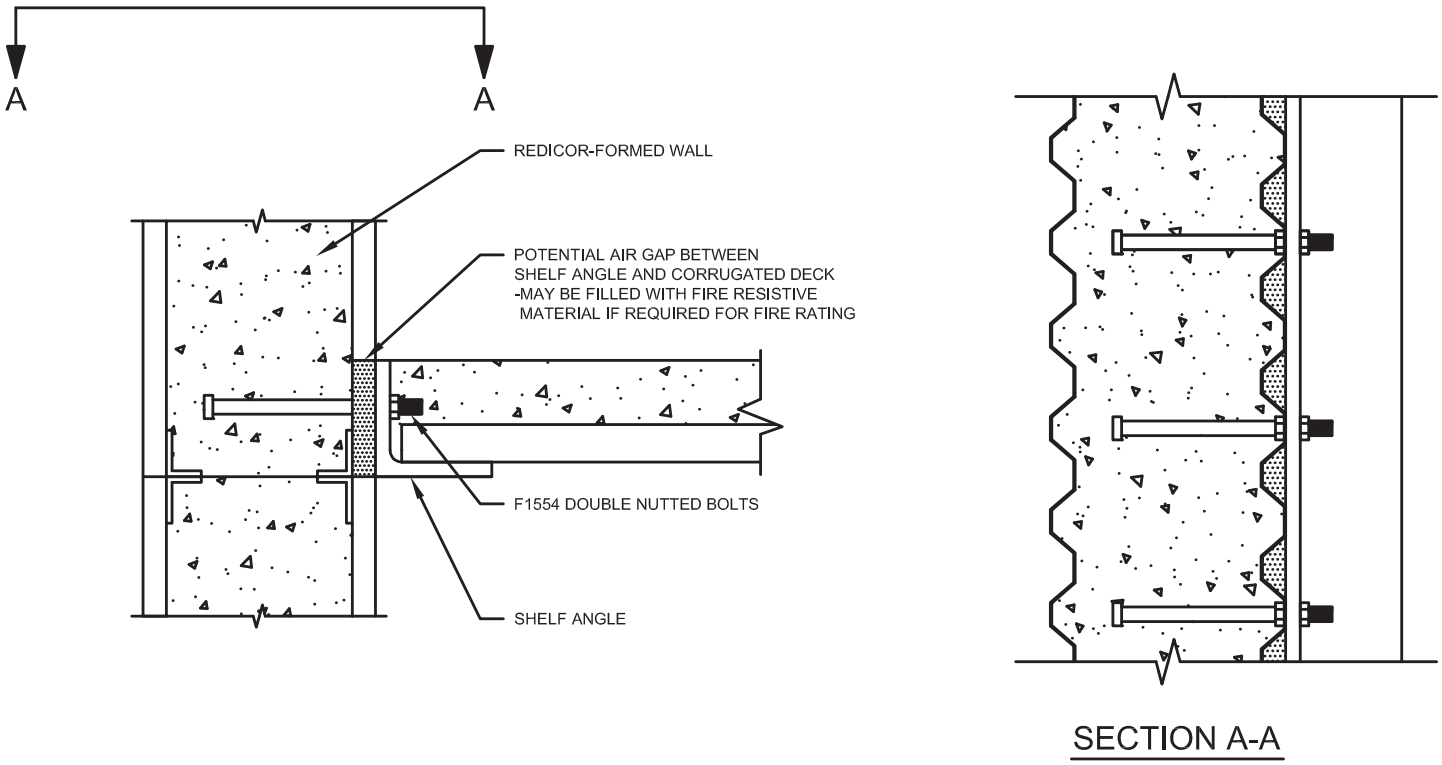

FIGURE 47- POTENTIAL GAP IN FIRE RESISTIVE FLOOR ASSEMBLY AT REDICOR-FORMED WALLS

MAKING COST EFFECTIVE DECISIONS WITH REDICOR

The RediCor Form System can be designed to meet your specific project requirements. If your project has flexibility in dimensions or design elements, incorporating items from the following guidelines can add financial value to your project by saving fabrication and detailing time and thus reducing cost.

• Eliminating composite modules

Keeping all core plan dimensions (including an allowance for any pre-installed protrusions such as shear tabs or shelf angles for floor framing) within the shipping limitations listed in the SIZING AND MODULARIZATION section of this document prevents the need for special connections between composite modules, reduces the number of shipments required, and reduces on-site time for connections.

• Specifying framing to meet 10' floor heights

When possible, specifying 10' floor heights allows the RediCor Form System to be built one module per floor which will drastically reduce the required number of modules and thus will also reduce on-site crane time for stacking, shipping costs, and fabrication and detailing costs.

• Utilizing RediCor's recommended standard details

The STRUCTURAL INFORMATION section of this document gives examples of RediCor's standard reinforcement and connection details. While RediCor can meet some special requirements beyond these details, it is most cost-effective to plan wall design around these standards when possible.

• Specifying Standard Embed Types

Should the specifying professional choose to maintain design responsibility for connections framing into the RediCor-formed wall, it would be advantageous to specify the standard embed connections described in the FLOOR AND ROOF FRAMING CONNECTIONS section of this document wherever possible.

NOTES

GENERAL

In this document, the seller refers to Vulcraft, the manufacturer and distributer of the RediCor™ Form System. The buyer refers to the party that receives, orders, and pays for the RediCor Form System. The relationship between the buyer and the seller is defined by the signed purchase contract. Though only one of the following directly pays the seller, all are involved in the buyer's side of the equation:

The Owner
The Specifying Professional (Engineer/Architect)
The General Contractor/Construction Manager
The Steel Fabricator
The Steel Erector
The Foundation Contractor
The Concrete Contractor
Manufacturers of roof or floor framing materials

Other trades that may be involved include:

The Mechanical Contractor
The Elevator Contractor
The Electrical Contractor
The Fire Sprinkler Contractor

ESTIMATES

The buyer shall provide a set of plans which show the work required in enough detail to produce an accurate estimate. The following information must be included:

1. Elevations for all core RediCor-formed walls, dimensioned for all geometry including rough opening sizes and locations
2. Definition of the tops of foundation walls supporting the walls
3. Definition of all members framing into the RediCor-formed wall at floor and roof levels
    a. Preferred connection types when applicable
    b. All vertical and horizontal loads for connection design (framing member to RediCor-formed wall)
4. All loads that must be transferred at the connection between the RediCor-formed walls and foundation walls
5. Stair layouts including rise, run, and plan dimensions
6. Preferred stair type (i.e. metal pan stairs) when applicable
7. Preferred handrail type when applicable
8. All demands that must be considered for structural design of for stair and handrail
9. All demands that must be considered for structural design of RediCor-formed wall

The typical scope of estimated work includes the following:

1. Stay in place steel formwork modules for all reinforced concrete cores and single walls to by formed with RediCor as identified by the purchaser
2. All rebar required within the reinforced concrete walls
    a. Horizontal rebar will be provided installed within the form modules
    b. Vertical rebar will be provided loose for field installation
3. Design and material to provide connections between floor and roof framing members and the reinforced concrete walls
4. Design and material to provide connection between the RediCor-formed walls and the foundation walls below
5. Structural design of and materials for metal stairs and handrail, when applicable
    a. To the maximum extent possible, metal stairs and landings will be provided attached to the core modules
    b. Handrails and associated brackets are to be field installed
6. Design of the reinforced concrete walls based on demands provided by the specifying professional.

The following are not included in the typical scope of estimated work, but may be included at the request of the purchaser at the time of the estimate:

1. Pre-installed flat steel embed plates for connection of elevator rail bracket inserts(*note: Vulcraft does not provide design, material, or recommendations for elevator rails, brackets, or inserts.) All loads required to be transferred to the core wall by the flat steel embed plates must be supplied to Vulcraft. All locations and dimensions of flat steel embed plates must be supplied to Vulcraft.
2. Pre-installed elevator hoist and divider beams (*note: Vulcraft does not provide design of elevator hoist beams) . Sizes and locations of hoist beams must be supplied to Vulcraft. End reactions of elevator hoist beams must be supplied to Vulcraft for design of embedded connections.

All construction phase activity, including site storage and erection, is by the buyer or his agents.

SHOP DRAWINGS

Prior to fabrication of the RediCor form modules, the seller will submit detailed shop drawings to the buyer for review by the buyer and any other necessary reviewer such as the specifying professional(s) or general contractor. Fabrication does not begin until the drawings are returned with final approval from the buyer.

The building plans and specifications supplied to the seller by the buyer are assumed to be accurate unless written notice is provided to the contrary. When discrepancies between plans and specifications are noted, the strictest interpretation shall govern.

Vulcraft-detailed shop drawings for approval will include the following:

1. Elevations of the RediCor-formed walls including module joint lines and rough opening sizes
2. Plan views of the RediCor-formed walls showing dimensions and locations relative to the specifying professional's defined building grid
3. Elevations of the RediCor-formed walls including rebar placement and necessary splices
4. Connections for all roof and floor framing members, including a representation of the construction loads and permanent loads the connections were designed to resist
5. Shelf angles and their connection to the form and RediCor-formed walls, including a representation of the construction loads and permanent loads they were designed to resist
6. Details of the foundation to RediCor-formed walls connection
7. Details of the stairs and handrails, when applicable, including locations, dimensions, and members sizes meeting the specifying professional's design intent

RESPONSIBILITIES OF THE BUYER

The following is a discussion of the division of responsibilities between the numerous parties on the buyer's side of the buyer/seller relationship.

The Owner: The owner initiates the process and defines requirements for the building including building type, usage, and features. The owner is responsible for hiring the specifying professional and general contractor/construction manager.

Specifying Professional: The specifying professional is the architect/engineer responsible for designing the building to the owner's requirements as well as to the appropriate codes and regulations. This party prepares plans and specifications with enough detail that other parties can understand the labor and material required for their scope of work (ref. Estimates in the General section above for more information regarding drawing and specification requirements for the RediCor Form System.) The specifying professional is responsible for reviewing and approving shop drawings. This approval is for ensuring conformity with the design intent, and does not approve deviations from the original specifications nor ensure dimensions or fit-up. The structural engineer of record (SEOR) provides all loads and any other design requirements for Vulcraft's design of the RediCor-formed walls.

General Contractor: The general contractor carries out the building construction process to completion. This party is responsible for clearly dividing work amongst sub-contractors.

Steel Fabricator: The steel fabricator supplies fabrication and erection drawings of steel

frame work for the building. In the context of the RediCor Form System, some coordination between the steel fabricator and the seller will be required for connection locations and details of steel members framing into the RediCor-formed walls.

Manufacturers: Other manufacturers, such as those manufacturing steel deck and joists, supply fabrication and erection drawings for their products. In the context of the RediCor Form System, some coordination between these manufacturers and the seller may be required when a manufacturer's product frames into the RediCor-formed walls.

Foundation Contractor: The foundation contractor is responsible for constructing the foundation according to the plans and specifications. In the context of the RediCor Form System, this party installs all embeds supplied by Vulcraft which are required for the connection of the foundation to the RediCor-formed walls above.

Steel Erector: In the context of the RediCor Form System, this party receives all shipments of form modules on site and checks for shipping damage and quantities. This party also erects all form modules, installs vertical rebar, installs the foundation to RediCor-formed walls attachment, and makes framing attachments. The erector is also responsible for temporarily bracing the building and its elements during erection. The RediCor Form System is not to be used as temporary bracing for lateral loads during erection and construction.

Concrete Contractor: In the context of the RediCor Form System, the concrete contractor is responsible for supplying concrete to meet the specifications set forth by Vulcraft and for the placement of concrete within the form system. This party must ensure the maximum form pressures as indicated in the Vulcraft detail drawings are not exceeded during concrete placement. This party also supplies and installs a temporary form around the base of the form system where the approximately 6" gap exists for facilitation of the foundation to RediCor-formed walls connection.

Other Trades: Other trades involved in building construction include mechanical contractors, finish contractors, and any other trade installing materials required to complete the building. In the context of the RediCor Form System, other trades must ensure they do not damage the RediCor Form System by:

1. Applying construction loads in excess of the indicated maximum construction loads at each shelf angle or framing member prior to concrete being placed in the system and reaching an appropriate level of strength
2. Cutting or notching structural elements of the form system prior to concrete being placed in the system and reaching an appropriate level of strength
3. Using the form system to support, plumb, or otherwise brace any building or construction elements other than the indicated floor and roof framing members

NOTES

NOTES

REDICOR™
Modular Steel Form System
BY VULCRAFT